KINGSLAND

HARRIS COUNTY, TEXAS

MEP PLANS

MECHANICAL NOTES

1. ALL SYSTEMS TO BE INSTALLED IN CONFORMANCE TO 2009 INTERNATIONAL MECHANICAL AND 2009 INTERNATIONAL BUILDING CODES
2. RECIRCULATING KITCHEN RANGE HOODS WITH CHARCOAL ELEMENT FILTERS INSTALLED PER 2009 UMC
3. BATHROOM EXHAUST FANS SIZED TO PROVIDE MINIMUM 50 CFM RESIDENTIAL AND 75 CFM/ WC AT CLUB.
4. EXHAUST DUCTS TO BE FABRICATED FROM STANDARD GAUGE SHEET METAL MIN 26 GA.
5. UNLESS OTHERWISE SPECIFIED, ALL DIMENSIONS SHOWN ARE INSIDE CLEAR DIMENSIONS. ADD 2" TO EACH DUCT DIMENSION TO ALLOW FOR INSULATION.
6. ELECTRICAL DATA SHOWN HERE IS THAT PUBLISHED BY THE MANUFACTURER. IT REMAINS THE RESPONSIBILITY OF THE ELECTRICAL CONTRACTOR TO PROVIDE THE APPROPRIATE WIRING SIZES AND CIRCUIT PROTECTION. HACR TYPE CIRCUIT BREAKERS.
7. PLUMBING CONTRACTOR TO PROVIDE CONDENSATE DRAIN HUB WITHIN 5' OF THE FAN COIL LOCATION. INCLUDING PRIMARY DRAIN LINE FROM HUB TO WASTE SYSTEM IN ACCORDANCE WITH 2006 IMC REQUIREMENTS.
8. ALL THERMOSTATS TO BE MOUNTED 48" A.F.F. TO TOP OF T-STAT
9. DRYER VENTS: INSTALL PER MFG'S SPECS. FOR VENT LIMITATION RE: DWG M-21
10. ALL MECHANICAL COMPONENTS MUST BE INSTALLED PER THE 2009 IECC.
11. INSTALL ALL HUB DRAINS AND INDIRECT DRAINS IN EXPOSED READILY ACCESSIBLE LOCATIONS.
12. DRYER & EXHAUST VENTS MAY NOT BE IN R/A AREA
13. UNDERCUT ALL DOORS 1" FOR RETURN AIR. BALANCE SYSTEM TO CFM'S SHOWN

DUCTWORK SHALL BE FIBER GLASS FLEX/DUCTBOARD TO BE INSULATED PER IECC. INSTALLED PER IMC AND NATIONAL STANDARDS. REFER TO IECC SCHEDULE ON DWG. M-2 FOR MIN. ENERGY REQUIREMENTS. A/C SYSTEM SHALL BE MIN 13 SEER.

GENERAL ABBREVIATIONS

A.F.F.	ABOVE FINISH FLOOR	DN	DOWN
A.F.G.	ABOVE FINISH GRADE	W	WASHER
B.F.C.	BELOW FINISH CEILING		
EDF	ELECTRIC DRINKING FOUNTAIN		
D	DRYER		

MECHANICAL ABBREVIATIONS

A/C	AIR CONDITIONER	F.D.	FIRE DAMPER
AHU	AIR HANDLER UNIT	H.V.A.C.	HEATING, VENTILATION, AIR CONDITIONING
C.D.L.	CONDENSATE DRAIN LINE		
C.R.D.	CEILING RADIATION DAMPER	O.A.D.	OUTSIDE AIR DUCT
BDD	BACK DRAFT DAMPER	RA	RETURN AIR
DIFF.	DIFFUSER	R.A.F.G.	RETURN AIR FILTER GRILLE
E.F.	EXHAUST FAN	R.A.G.	RETURN AIR GRILLE
E.V.	EXHAUST VENT	REG	REGISTER
FCU	FAN COIL UNIT	TEF	TOILET EXHAUST FAN
		V.D.	VOLUME DAMPER

ELECTRICAL ABBREVIATIONS

AFCI	ARC FAULT CIRCUIT INTERRUPTER	FLA	FULL LOAD AMPS
CKT	CIRCUIT	GFI	GROUND FAULT INTERRUPTER
C	CONDUIT		
CU	COPPER	HP	HORSEPOWER
DL	DAMP LISTED	MCA	MINIMUM CIRCUIT AMPACITY
D/S	DISCONNECT SWITCH	MOP	MAXIMUM OVER CURRENT PROTECTION
EDO	ELECTRIC DOOR OPENER		
		PEC	PHOTO ELECTRIC CELL
		WP	WATER PROOF

FIRE ALARM

FINAL FIRE ALARM DESIGN SHALL BE SUBMITTED TO THE LOCAL FIRE MARSHAL FOR APPROVAL PRIOR TO INSTALLATION. PLANS PROVIDED ARE SCHEMATIC AND SHALL BE PREPARED BY A LICENSED FIRE PROTECTION CONSULTANT/CONTRACTOR.

ELECTRICAL NOTES

ALL ELECTRICAL INSTALLATION SHALL BE PER THE NEC-2014 EDITION. PNL'S, SWITCH BOARDS, D/S, BREAKERS, ETC. SHALL BE CUTLER HAMMER OR APPROVED EQUAL. COORDINATE POWER REQUIREMENTS PRIOR TO ORDERING EQUIPMENT.

LIGHT FIXTURES SHALL BE SUBMITTED FOR OWNER/ARCH. APPROVAL. VARIANCE FROM ORIGINAL DWG.'S SHALL BE SUBMITTED TO VERIFY COMPLIANCE W/THE IECC.
ALL BRANCH CIRCUITS IN DWELLING UNITS PROTECTED BY ARC FAULT CIRCUIT INTERRUPTERS.
PER ARTICLE 210.12 OF THE 2011 NEC
DAMP LISTED (DL) AND WATER PROOF (WP) LUMINAIRE IN 8X3 AREA OF TUB/ SHOWER.
ALL LUMINAIRE FIXTURES IN CLOTHES CLOSETS SHALL HAVE MINIMUM CLEARANCES PER NEC 410.8(D):

1. SURFACE MTD. FLUORESCENT LUMINAIRES (FIXTURES) INSTALLED ON THE WALL ABOVE THE DOOR OR ON THE CEILING, PROVIDED THERE IS A MINIMUM CLEARANCE OF 300 MM (12 IN) BETWEEN THE LUMINAIRE (FIXTURE) AND THE NEAREST POINT OF STORAGE SPACE.
2. SURFACE MTD. FLUORESCENT LUMINAIRES (FIXTURES) INSTALLED ON THE WALL ABOVE THE DOOR OR ON THE CEILING, PROVIDED THERE IS A MINIMUM CLEARANCE OF 150 MM (6 IN.) BETWEEN THE LUMINAIRE (FIXTURE) AND THE NEAREST POINT OF A STORAGE SPACE.
3. RECESSED FLUORESCENT LUMINAIRES (FIXTURES) WITH A COMPLETELY ENCLOSED LAMP INSTALLED IN THE WALL OR THE CEILING, PROVIDED THERE IS A MINIMUM CLEARANCE OF 150 MM (6 IN.) BETWEEN THE LUMINAIRE (FIXTURE) AND THE NEAREST POINT OF A STORAGE SPACE.
4. RECESSED FLUORESCENT LUMINAIRES (FIXTURES) INSTALLED IN THE WALL OR THE CEILING, PROVIDED THERE IS A MINIMUM CLEARANCE OF 150 MM (6 IN.) BETWEEN THE LUMINAIRE (FIXTURE) AND THE NEAREST POINT OF A STORAGE SPACE.

CABINETS: SAFETY DEAD FRONT TYPE; BOX MADE OF CODE GAGE GALVANIZED STEEL; MINIMUM GUTTER SPACE 4" ON ALL SIDES BUT NOT LESS THAN NEC REQUIREMENTS; DOOR WITH FLUSH TYPE COMBINATION LOCK AND LATCH. DOOR SHALL HAVE SEMI CONCEALED HINGES. STEEL DIRECTORY FRAME WITH CHANGEABLE TYPEWRITTEN CARD DIRECTORY AND TRANSPARENT PLASTIC DIRECTORY PROTECTOR.
BREAKERS: PLUG-IN FOR 120/240 VOLTS; QUICK-MAKE, QUICK-BREAK, TRIP-FREE, THERMAL-MAGNETIC TRIP; AUTOMATIC TRIPPING INDICATED BY HANDLE AT MID-POINT POSITION; MULTI-POLE BREAKERS SHALL HAVE COMMON TRIP. MINIMUM INTERRUPTING RATINGS FOR SINGLE POLE BREAKERS SHALL BE 10,000 AMPERES SYMMETRICAL AT 120 VOLTS.

METERS SHALL BE THE SINGLE PHASE, 240 VOLT RESIDENTIAL TYPE. METERS SHALL HAVE AUTOMATED ASSEMBLY PROCESSES TYPE, THERMAL AGE CYCLING PRIOR TO CALIBRATION, HIGH STRENGTH FRAME, MOLDED BASE COMPRESSION, LARGE POINTER, DOUBLE INSULATED CURRENT COILS. UNIT TO BE SELF CONTAINED AND MEASURE IN KILOWATT-HOURS.

MODULAR METERING SHALL BE SUBMITTED TO POWER CO. FOR APPROVAL PRIOR TO ORDERING EQUIPMENT.

PROVIDE ALL LIGHT FIXTURES AS SHOWN. COMPLETELY WIRED AND SECURELY ATTACHED TO SUPPORTS AS REQUIRED BY THE NEC. INCLUDE ALL NECESSARY ACCESSORIES, INCLUDING PLASTER FRAMES FOR PLASTER CEILINGS. ALL FIXTURES TO BE APPROVED BY OWNER PRIOR TO INSTALLATION.

APARTMENTS: NMC (ROMEX) COPPER, MINIMUM WIRE SIZE #14 ALL WIRE SHALL BE STRANDED EXCEPT #1/0 AND SMALLER MAY BE SOLID. ALL WIRE COLOR CODED, WITH SAME COLOR CONNECTED TO SAME UNGROUNDED PHASE THROUGHOUT THE INSTALLATION. SERVICE ENTRANCE CONDUCTORS MAY BE SE RATED AL. ALL GROUNDING CABLE MUST BE COPPER.

ALL CONDUCTORS FOR THE CLUBHOUSE, NON-MULTIFAMILY BUILDINGS & BUILDING TYPES I, II, AND V SHALL BE IN APPROVED RACEWAY PER CODE.

ALL CIRCUIT CONDUCTORS SHALL BE INSTALLED TO PREVENT A VOLTAGE DROP IN EXCESS OF 3% TO THE FARTHEST RECEPTACLE/LTG/EQUIPMENT.

ALL MOUNTING HEIGHTS SHALL BE IN ACCORDANCE WITH THE TEXAS ACCESSIBILITY STANDARD (TAS), FAIR HOUSING AND ADA REQUIREMENTS.
ACQUIRE MECHANICAL DRAWINGS TO ELECTRICAL CONTRACTOR FOR COORDINATION.

FIRE ALARM AUDIO/VISUAL ALARM SHALL BE 80" A.F.F. TO THE BOTTOM OF DEVICE OR 6" BELOW CEILING WHICHEVER IS LOWER.

PENETRATIONS (TV, PHONE, RECEPTACLES, ETC.) OF UL RATED PARTY WALLS SHALL MAINTAIN FIRE RATING BY USE OF PUTTY PADS, SHEETROCK ENCLOSURE, OR UL RATED FIREBOX (NUTEK). 24" SEPARATION MAY BE USED IN SOME PARTY WALL APPLICATIONS.

ELECTRICAL CONTRACTOR TO PROVIDE TO AUSTIN ENERGY SERVICE CONSULTANT DRAWING(S) SHOWING THE IDENTIFIED METER CENTER LOCATIONS ON EACH LABELED BUILDING AND THE LIVING UNIT NUMBERS SERVED BY EACH METER CENTER.

PROVIDE INTERSYSTEM BONDING AT ALL SERVICES FOR CONNECTION OF ELECTRICAL, TELEPHONE AND CATV EQUIPMENT PER ARTICLE 250.94

SIZE CONDUCTORS IN CONDUITS EXPOSED TO SUN LIGHT IN ACCORDANCE WITH ARTICLE 310.15(B)(2)(c).

ALL 15 AND 20 AMP RECEPTACLES INSTALLED OUTDOORS SHALL BE A LISTED WEATHER-RESISTANT TYPE PER ARTICLE 406.8 (A)

DWELLING UNIT RECEPTACLES SPECIFIED IN ARTICLE 210.52 , ALL 15 AND 20 AMP RECEPTACLES SHALL BE LISTED TAMPER-RESISTANT TYPE.

OUTLETS SUPPLYING POOL PUMP MOTORS FROM BRANCH CIRCUITS WITH 15 OR 20 AMP 125 OR 240 VOLT SINGLE-PHASE OVERCURRENT PROTECTION, WHETHER BY RECEPTACLE OR DIRECT CONNECTION, SHALL BE PROVIDED WITH GFCI PROTECTION PER ARTICLE 680.22(B).

PIPING MATERIAL

SANITARY SEWER AND VENT PIPING SHALL BE SCHEDULE 40 PVC INSTALLED PER MFG'S INSTRUCTIONS.

ALL DOMESTIC WATER LESS THAN OR EQUAL TO 2" SHALL BE FLOWGUARD CPVC INSTALLED PER MFG'S SPECIFICATIONS. FOR WATER PIPING 2-1/2" OR GREATER, USE SCHEDULE 40 OR 80 PIPE AND SCHEDULE 80 CPVC FITTINGS. WATER PIPING INSTALLED BELOW GROUND SHALL BE TYPE (K) COPPER AND LOCATED BELOW FREEZE LINE.

PLUMBING NOTES

ALL PIPING SHALL BE INSTALLED AS REQUIRED BY THE 2009 INTERNATIONAL PLUMBING CODE. ALL DOMESTIC WATER LESS THAN OR EQUAL TO 2" SHALL BE CPVC INSTALLED PER MFG'S SPECIFICATIONS. FOR WATER PIPING 2-1/2" OR GREATER, SCHEDULE 80 PIPE AND SCHEDULE 80 CPVC FITTINGS ABOVE GROUND & TYPE (K) COPPER BELOW GROUND.

PIPING SHALL BE INSTALLED IN ATTIC AND EXTERIOR WALLS AND SHALL BE INSULATED W/1/2" INSULATION.
IN ATTIC: INSULATION SHALL BE PLACED ABOVE PIPING.
IN WALLS: INSULATION SHALL BE PLACED BETWEEN EXTERIOR WALL & PIPING.

ALL HOSE BIBS SHALL BE FREEZE PROOF W/VACUUM BREAKER.

ALL SANITARY SEWER AND VENT PIPING SHALL BE SCHEDULE 40 PVC INSTALLED PER MFG.'S INSTRUCTIONS.

6"Ø DIAMETER SEWER PIPES AND LARGER MAY BE SDR 35 OR BETTER

PLUMBING CONTRACTOR SHALL FURNISH AND INSTALL ALL HOT AND COLD WATER PIPING SYSTEMS, DRAINAGE, WASTE AND VENT PIPING SYSTEMS, FIXTURES AND HARDWARE.

HAMMER ARRESTORS SHALL BE LOCATED AT EACH FAST ACTING VALVE. SIOUX CHIEF MINI ARRESTOR, 660 SERIES TEE/STRAIGHT.

MEET LOCAL CODE REQUIREMENTS FOR ALL FIRE SEALANT REQUIREMENTS AND REFER TO ARCHITECTURAL DRAWINGS FOR ANY ADDITIONAL REQUIREMENTS. MAINTAIN 1 AND 2 HOUR PENETRATIONS WITH CODE APPROVED MATERIALS. CUTOFF VALVES, STOPS, SHALL BE PROVIDED WHERE SHOWN ON THE DRAWINGS AND AT ALL FIXTURE CONNECTIONS. PROVIDE INTEGRAL STOPS FOR BATHTUBS WHERE THERE ARE NO ACCESS DOORS. CLEAN OUTS SHALL BE PROVIDED AS REQUIRED BY CODE AND AS SHOWN ON THE DRAWINGS. HEATER PANS ARE TO BE INSTALLED AS SHOWN ON DRAWINGS. CONDENSATE DRAIN LINES SHALL BE MINIMUM 3/4", INSULATED WITH TRAP. RUN TO SANITARY TRAP (LAV OR TUB). TEST ALL WATER SYSTEMS IN PRESENCE OF OWNER'S REPRESENTATIVE AT MINIMUM 100 PSIG FOR 8hrs. SANITARY, WASTE, AND VENTS SHALL BE TESTED WITH 10' HEAD OF WATER FOR 8hrs WITH LEVEL OF WATER TO REMAIN UNCHANGED. FLUSH AND SANITIZE WATER SYSTEM PER FEDERAL STANDARDS. INSTALL ALL PIPING SYSTEMS SO THAT THEY WILL NOT BE SUBJECT TO UNDUE STRAINS OR STRESSES AND PROVISIONS SHALL BE MADE FOR EXPANSION, CONTRACTION, AND STRUCTURAL SETTLEMENT. INSTALL MIN. 6" SAND FILL AROUND ALL UNDERGROUND PIPES. ALL PIPING TO BE INSULATED IN AREAS SUBJECT TO FREEZING TEMPERATURES. REFER TO CIVIL PLANS FOR ALL SANITARY SEWER AND DOMESTIC WATER TAP LOCATIONS. BUILDING FINISH FLOOR ELEVATIONS, AND SANITARY FLOW LINES.

WATER HEATERS FOR UNITS SHALL BE STATE SELECT WATER HEATERS (SEE SCHEDULE ON DWG P-2.1) OR AN APPROVED EQUAL. HEATERS SHALL HAVE A MAXIMUM WORKING PRESSURE OF 150 PSI. A NOMINAL STORAGE TANK CAPACITY OF 50 GALLONS WITH A SEPARATE 3/4" TAPPING FOR THE SUPPLIED RELIEF VALVE INSTALLATION. ALL INTERNAL SURFACES OF THE HEATERS EXPOSED TO WATER SHALL BE GLASS COATED WITH COMMERCIAL GRADE GLASS COATING. LOWER ELECTRIC HEATING ELEMENT SHALL BE PHOENIX STAINLESS STEEL ELEMENTS, SCREW - IN DESIGN. ELEMENT OPERATION SHALL BE DOUBLE ELEMENT, NON - SIMULTANEOUS (OR SINGLE ELEMENT). THE CONTROLS SHALL INCLUDE A THERMOSTAT WITH EACH ELEMENT AND A HIGH TEMPERATURE CUTOFF. THE JACKET SHALL PROVIDE FULL SIZE CONTROL COMPARTMENTS FOR PERFORMANCE OF SERVICE AND MAINT. THROUGH FRONT PANEL OPENINGS. THE BRASS DRAIN VALVE SHALL BE LOCATED IN THE FRONT FOR EASE OF SERVICING. OUTER JACKET SHALL BE BAKED ENAMEL FINISH.

PLUMBING SYMBOLS

SYMBOL	ABBREVIATION	DESCRIPTION
	CW	DOMESTIC COLD WATER PIPING
	HW	DOMESTIC HOT WATER PIPING
	CONT.	PIPE CONTINUED
		CAP
	CO	CLEANOUT
		UNION
	FD	FLOOR DRAIN WITH 1/2" TP
		BALL VALVE
		GATE VALVE
		CHECK VALVE
		THERMAL RELIEF VALVE
		PRESSURE REDUCING VALVE
		PRESSURE REGULATING CHECK VALVE
		THERMOSTATIC MIXING VALVE
		BALL VALVE
		PRESSURE GAUGE
		FLOW SWITCH
	HB	HOSE BBB
	WSFU	WATER SUPPLY FIXTURE UNIT
	DFU	DRAINAGE FIXTURE UNIT

PLUMBING ABBREVIATIONS

BT	BATHTUB	HWS	HOT WATER SUPPLY
CO	CLEAN OUT	KS	KITCHEN SINK
CW	COLD WATER	LAV	LAVATORY
CWS	COLD WATER SUPPLY	SHWR	SHOWER
DFU	DRAIN FIXTURE UNITS	TP&R	TEMPERATURE PRESSURE & RELIEF VALVE
DP	DISPOSAL		
DW	DISHWASHER	VTR	VENT TO ROOF
EDF	ELECTRIC DRINKING FOUNTAIN	W	WASHER
FD	FLOOR DRAIN	WC	WATER CLOSET
GPM	GALLONS PER MINUTE	WSFU	WATER SUPPLY FIXTURE UNITS
HW	HOT WATER		
HWR	HOT WATER RETURN		

KINGSLAND

REFERENCE NUMBER: 919-15

SHEET#		SCALE
MEP-0.1	- TITLE PAGE/ MEP NOTES / INDEX	N.T.S.
MEP-0.2	- ENERGY COMPLIANCE NOTES (RESIDENTIAL)	N.T.S.
MEP-0.3	- ENERGY COMPLIANCE NOTES (COMMERCIAL)	N.T.S.
MEP-0.4	- ENERGY COMPLIANCE NOTES (COMMERCIAL)	N.T.S.
MEP-0.5	- ENERGY COMPLIANCE NOTES (COMMERCIAL)	N.T.S.
MEP-0.6	- DETAIL SHEET	N.T.S.
M-1.1	- MECHANICAL LAYOUT: SITE PLAN	1"=40'
M-2.1	- MECHANICAL LAYOUT: UNITS A1,A1-A,A2, PARTIALS A1-B,A2-A&B	1/4"
M-2.2	- MECHANICAL LAYOUT: UNITS A2-C,A2-D,A3,A3-A,PARTIALS A2-E,A2F,A3-E&F	1/4"
M-2.3	- MECHANICAL LAYOUT: UNITS A3-D,A4,A4-HC,B1,B1-A,PARTIAL A4-A	1/4"
M-2.4	- MECHANICAL LAYOUT: UNITS B1-B,B2,B2-HC,B3,B4	1/4"
M-2.5	- MECHANICAL LAYOUT: UNITS B5, B5-A, PARTIAL B5-C,B5-PRESS,B5-B	1/4"
M-2.6	- MECHANICAL LAYOUT: UNITS B6,C1,C1-HC	1/4"
M-3.1	- MECHANICAL LAYOUT: CLUB HOUSE	3/16"
M-3.2	- MECHANICAL LAYOUT: MAINTENANCE,TRASH/RECYCLE,PET WASH,PAVILION	3/16"
E-1.1	- ELECTRICAL LAYOUT: SITE PLAN	1"=40'
E-2.1	- ELECTRICAL LAYOUT: UNITS A1,A1-A,A2, PARTIALS A1-B,A2-A&B	1/4"
E-2.2	- ELECTRICAL LAYOUT: UNITS A2-C,A2-D,A3,A3-A,PARTIALS A2-E,A2F,A3-E&F	1/4"
E-2.3	- ELECTRICAL LAYOUT: UNITS A3-D,A4,A4-HC,B1,B1-A,PARTIAL A4-A	1/4"
E-2.4	- ELECTRICAL LAYOUT: UNITS B1-B,B2,B2-HC,B3,B4	1/4"
E-2.5	- ELECTRICAL LAYOUT: UNITS B5, B5-A, PARTIAL B5-C,B5-PRESS,B5-B	1/4"
E-2.6	- ELECTRICAL LAYOUT: UNITS B6,C1,C1-HC	1/4"
E-3.1.1	- ELECTRICAL LAYOUT: CLUB HOUSE - LIGHTING	3/16"
E-3.1.2	- ELECTRICAL LAYOUT: CLUB HOUSE - POWER	3/16"
E-3.2.1	- ELECTRICAL LAYOUT: MAINTENANCE,TRASH/RECYCLE,PET WASH,PAVILION - LIGHTING	3/16"
E-3.2.2	- ELECTRICAL LAYOUT: MAINTENANCE,TRASH/RECYCLE,PET WASH,PAVILION - POWER	3/16"
E-3.3	- ELECTRICAL LAYOUT: CAR PORT/GARAGE	3/16"
E-4.1	- ELECTRICAL LAYOUT: BLDG TYPE I - 1ST, 2ND & 3RD FLOOR	1/8"
E-4.2	- ELECTRICAL LAYOUT: BLDG TYPE II - 1ST , 2ND & 3RD FLOOR	1/8"
E-4.3	- ELECTRICAL LAYOUT: BLDG TYPE III - 1ST FLOOR	1/8"
E-4.4	- ELECTRICAL LAYOUT: BLDG TYPE III - 2ND & 3RD FLOOR	1/8"
E-4.5	- ELECTRICAL LAYOUT: BLDG TYPE IV - 1ST, 2ND & 3RD FLOOR	1/8"
E-4.6	- ELECTRICAL LAYOUT: BLDG TYPE V - 1ST FLOOR	1/8"
E-4.7	- ELECTRICAL LAYOUT: BLDG TYPE V - 2ND & 3RD FLOOR	1/8"
E-4.8	- ELECTRICAL LAYOUT: BLDG TYPE VI - 1ST, 2ND & 3RD FLOOR	1/8"
E-5.1	- ELECTRICAL CALCULATIONS	N.T.S.
E-5.2	- ELECTRICAL CALCULATIONS	N.T.S.
E-5.3	- ELECTRICAL CALCULATIONS	N.T.S.
E-5.4	- ELECTRICAL CALCULATIONS	N.T.S.
P-1.1	- PLUMBING LAYOUT: SITE PLAN	1"=40'
P-2.1	- PLUMBING LAYOUT: UNITS A1,A1-A,A2, PARTIALS A1-B,A2-A&B	1/4"
P-2.2	- PLUMBING LAYOUT: UNITS A2-C,A2-D,A3,A3-A,PARTIALS A2-E,A2F,A3-E&F	1/4"
P-2.3	- PLUMBING LAYOUT: UNITS A3-D,A4,A4-HC,B1,B1-A,PARTIAL A4-A	1/4"
P-2.4	- PLUMBING LAYOUT: UNITS B1-B,B2,B2-HC,B3,B4	1/4"
P-2.5	- PLUMBING LAYOUT: UNITS B5, B5-A, PARTIAL B5-C,B5-PRESS,B5-B	1/4"
P-2.6	- PLUMBING LAYOUT: UNITS B6,C1,C1-HC	1/4"
P-3.1.1	- PLUMBING LAYOUT: CLUB HOUSE - SANITARY SEWER & GAS	3/16"
P-3.1.2	- PLUMBING LAYOUT: CLUB HOUSE - DOMESTIC WATER	3/16"
P-3.2.1	- PLUMBING LAYOUT: MAINTENANCE,TRASH/RECYCLE,PET WASH,PAVILION - SANITARY SEWER & GAS	3/16"
P-3.2.2	- PLUMBING LAYOUT: MAINTENANCE,TRASH/RECYCLE,PET WASH,PAVILION - DOMESTIC WATER	3/16"
P-4.1	- PLUMBING LAYOUT: BLDG TYPE I - 1ST, 2ND & 3RD FLOOR	1/8"
P-4.2	- PLUMBING LAYOUT: BLDG TYPE II - 1ST, 2ND & 3RD FLOOR	1/8"
P-4.3	- PLUMBING LAYOUT: BLDG TYPE III - 1ST FLOOR	1/8"
P-4.4	- PLUMBING LAYOUT: BLDG TYPE III - 2ND & 3RD FLOOR	1/8"
P-4.5	- PLUMBING LAYOUT: BLDG TYPE IV - 1ST, 2ND & 3RD FLOOR	1/8"
P-4.6	- PLUMBING LAYOUT: BLDG TYPE V - 1ST FLOOR	1/8"
P-4.7	- PLUMBING LAYOUT: BLDG TYPE V - 2ND & 3RD FLOOR	1/8"
P-4.8	- PLUMBING LAYOUT: BLDG TYPE VI - 1ST, 2ND & 3RD FLOOR	1/8"
P-5.1	- PLUMBING RISERS: SANITARY SEWER	N.T.S.
P-5.2	- PLUMBING RISERS: SANITARY SEWER	N.T.S.
P-5.3	- PLUMBING RISERS: DOMESTIC WATER & GAS	N.T.S.

HGE CONSULTING, INC.
MEP ENGINEERS
F-7762
15603 GLEN CHASE
HOUSTON, TEXAS 77095
PHONE: 281-856-7682
FAX: 281-856-2438
Email:
MEP@HGECONSULTING.COM

IF ANY OR ALL OF THIS DOCUMENT IS REPRODUCED, MODIFIED OR WRONGLY DISTRIBUTED, YOU WILL BE IN VIOLATION OF CONTRACT AND INFRINGEMENT OF COPYRIGHT. IF YOU FEEL THAT THIS DOCUMENT HAS REACHED YOU IN ERROR PLEASE CONTACT THE ABOVE OWNER AND DESTROY THE DOCUMENT. IF YOU CHOSE NOT TO DO SO, YOU WILL BE SUBJECT TO PROSECUTION UNDER THE CURRENT COPYRIGHT LAWS.

NUMBER	DATE	DESCRIPTION	BY:

KINGSLAND APTS.
HARRIS COUNTY, TEXAS

STATE OF TEXAS
JAIRZINHO VASQUEZ
88666
LICENSED PROFESSIONAL ENGINEER
08/18/15

- ○ PROGRESS SET
- ○ PERMIT ISSUE
- ● CONSTRUCTION ISSUE

DATE:	08/17/2015
DRAWN BY:	JA
CHK'D BY:	JV
JOB :	919-15

MEP-0.1

ENERGY COMPLIANCE (RESIDENTIAL)

MANDATORY MECHANICAL REQUIREMENTS: IECC 2009

SECTION 403 SYSTEMS (MANDATORY)

403.1 CONTROLS.
AT LEAST ONE THERMOSTAT SHALL BE PROVIDED FOR
EACH SEPARATE HEATING AND COOLING SYSTEM.

403.1.1 PROGRAMMABLE THERMOSTAT. WHERE THE PRIMARY HEATING SYSTEM IS A FORCED-AIR FURNACE, AT LEAST ONE THERMOSTAT PER DWELLING UNIT SHALL BE CAPABLE OF CONTROLLING THE HEATING AND COOLING SYSTEM ON A DAILY SCHEDULE TO MAINTAIN DIFFERENT TEMPERATURE SET POINTS AT DIFFERENT TIMES OF THE DAY. THIS THERMOSTAT SHALL INCLUDE THE CAPABILITY TO SET BACK OR TEMPORARILY OPERATE THE SYSTEM TO MAINTAIN ZONE TEMPERATURES DOWN TO 55°F (13°C) OR UP TO 85°F (29°C). THE THERMOSTAT SHALL INITIALLY BE PROGRAMMED WITH A HEATING TEMPERATURE SET POINT NO HIGHER THAN 70°F (21°C) AND A COOLING TEMPERATURE SET POINT NO LOWER THAN 78°F (26°C).

403.1.2 HEAT PUMP SUPPLEMENTARY HEAT.
HEAT PUMPS HAVING SUPPLEMENTARY ELECTRIC-RESISTANCE HEAT SHALL HAVE CONTROLS THAT, EXCEPT DURING DEFROST, PREVENT SUPPLEMENTAL HEAT OPERATION WHEN THE HEAT PUMP COMPRESSOR CAN MEET THE HEATING LOAD.

403.2 DUCTS.

403.2.1 INSULATION.
SUPPLY DUCTS IN ATTICS SHALL BE INSULATED TO A MINIMUM OF R-8. ALL OTHER DUCTS IN SHALL BE INSULATED TO A MINIMUM OF R-6.

EXCEPTION: DUCTS OR PORTIONS THEREOF LOCATED COMPLETELY
INSIDE THE BUILDING THERMAL ENVELOPE.

403.2.2 SEALING.
ALL DUCTS, AIR HANDLERS, FILTER BOXES, AND BUILDING CAVITIES USED AS DUCTS SHALL BE SEALED. JOINTS AND SEAMS SHALL COMPLY WITH SECTION M1601.4.1 OF THE INTERNATIONAL RESIDENTIAL CODE.

DUCT TIGHTNESS SHALL BE VERIFIED BY EITHER IF THE FOLLOWING:
1. POST CONSTRUCTION TEST: LEAKAGE TO OUTDOORS SHALL BE LESS THAN OR EQUAL TO 8 CFM (226.5 L/MIN) PER 100FT² (9.29 M²) OF CONDITIONED FLOOR AREA OR A TOTAL LEAKAGE LESS THAN OR EQUAL TO 12 CFM (12 L/MIN) PER 100 FT² (9.29 M²) OF CONDITIONED FLOOR AREA WHEN TESTED AT A PRESSURE DIFFERENTIAL OF 0.1 INCHES W.G. (25 PA) ACROSS THE ENTIRE SYSTEM, INCLUDING THE MANUFACTURER'S AIR HANDLER ENCLOSURE. ALL REGISTER BOOTS SHALL BE TAPED OR OTHERWISE SEALED DURING THE TEST.

2. ROUGH-IN TEST: TOTAL LEAKAGE SHALL BE LESS THAN OR EQUAL TO 6 CFM (16.9 L/MIN) PER 100 FT² (9.29 M²) OF CONDITIONED FLOOR AREA WHEN TESTED AT A PRESSURE DIFFERNTIAL OF 0.1 INCHES W.G. (25 PA) ACROSS THE ROUGHED IN SYSTEM, INCLUIDING THE MANUFACTURER'S AIR HANDLER ENCLOSRE. ALL REGISTER BOOTS SHALL BE TAPED OR OTHERWISE SEALED DURING THE TEST. IF THE AIR HANDLER IS NOT INSTALLED AT THE TIME OF THE TEST, TOTAL LEAKAGE SHALL BE LESS THAN OR EQUAL TO 4 CFM (113.3 L/MIN) PER 100 FT² (9.29 M²) OF CONDITIONED FLOOR AREA.

EXCEPTIONS: DUCT TIGHTNESS TEST IS NOT REQUIRED IF THE AIR HANDLER AND ALL DUCT ARE LOCATED WITHIN CONDITIONED SPACE.

403.2.3 BUILDING CAVITIES.
BUILDING FRAMING CAVITIES SHALL NOT BE USED AS SUPPLY DUCTS.

403.3 MECHANICAL SYSTEM PIPING INSULATION.
MECHANICAL SYSTEM PIPING CAPABLE OF CARRYING FLUIDS ABOVE 105°F (41°C) OR BELOW 55°F (13°C) SHALL BE INSULATED TO A MINIMUM OF R-3.

403.4 CIRCULATING HOT WATER SYSTEMS.
ALL CIRCULATING SERVICE HOT WATER PIPING SHALL BE INSULATED TO AT LEAST R-2. CIRCULATING HOT WATER SYSTEMS SHALL INCLUDE AN AUTOMATIC OR READILY ACCESSIBLE MANUAL SWITCH THAT CAN TURN OFF THE HOT WATER CIRCULATING PUMP WHEN THE SYSTEM IS NOT IN USE.

403.5 MECHANICAL VENTILATION.
OUTDOOR AIR INTAKES AND EXHAUSTS SHALL HAVE AUTOMATIC OR GRAVITY DAMPERS THAT CLOSE WHEN THE VENTILATION SYSTEM IS NOT OPERATING.

403.6 EQUIPMENT SIZING.
HEATING AND COOLING EQUIPMENT SHALL BE SIZED IN ACCORDANCE WITH SECTION M1401.3 OF THE INTERNATIONAL RESIDENTIAL CODE.

403.7 SYSTEMS SERVING MULTIPLE DWELLING UNITS.
SYSTEMS SERVING MULTIPLE DWELLING UNITS SHALL COMPLY WITH SECTIONS 503 AND 504 IN LIEU OF SECTION 403.

403.8 SNOW MELT SYSTEM CONTROLS.
SNOW- AND ICE-MELTING SYSTEMS, SUPPLIED THROUGH ENERGY SERVICE TO THE BUILFDING, SHALL INCLUDE AUTOMATIC CONTROLS CAPABLE OF SHUTTING OFF THE SYSTEM WHEN THE PAVEMENT TEMPERATURE IS ABOVE 50°F, AND NO PERCIPITATION IS FALLING AND AN AUTOMATIC OR MANUAL CONTROL THAT WILL ALLOW SHUTOFF WHEN THE OUTDOOR TEMPERATURE IS ABOVE 40°F.

403.9 POOLS.
POOLS SHALL BE PROVIDED WITH ENERGY CONSERVING MEASURES IN ACCORDANCE WITH SECTIONS 403.9.1 THROUGH 403.9.3.

403.9.1 POOL HEATERS.
ALL POOL HEATERS SHALL BE EQUIPED WITH READILY ACCESIBLE ON-OFF SWITCH TO ALLOW SHUTTING OFF THE HEATER WITHOUT ADJUSTING THE THERMOSTAT SETTING. POOL HEATERS FIRED BY NATURAL GAS SHALL NOT HAVE CONTINUOUSLY BURNING PILOT LIGHTS.

403.9.2 TIME SWITCHES.
TIME SWITCHES THAT CAN AUTOMATICALLY TURN OFF AND ON HEATERS AND PUMPS ACCORDING TO A PRESET SCHEDULE SHALL BE INSTALLED ON A SWIMMING POOL HEATERS AND PUMPS.

EXCEPTIONS:
1. WHERE PUBLIC HEALTH STANDARDS REQUIRE 24-HOUR PUMP OPERATION.
2. WHERE PUMPS ARE REQUIRED TO OPERATE SOLAR- AND WASTE-HEAT-RECOVERY POOL HEATING SYSTEMS.

403.9.3 POOL COVERS.
HEATED POOLS SHALL BE EQUIPED WITH A VAPOR RETARDANT POOL COVER ON OR AT THE WATER SURFACE. POOLS HEATED TO MORE THAN 90°F (32°C) SHALL HAVE A POOL WITH A MINUMUM INSULATION VALUE OF R-12.

EXCEPTION: POOL DERIVING OVER 60 PERCENT OF THE ENERGY FOR HEATING FROM SITE-RECOVERED ENERGY OR SOLAR ENERGY SOURCE.

ENVELOPE COMPONENT CERTIFICATION

BUILDING COMPONENT CERTIFICATION
- INSULATION R-VALUES AND GLAZING AND DOOR U-FACTORS MUST BE CLEARLY MARKED ON BUILDING PLANS AND SPECIFICATIONS.
- CERTIFICATION OF INSTALLED COMPONENTS IS REQUIRED AND CAN BE ACCOMPLISHED THROUGH ANY OF THE FOLLOWING METHODS:
  - PRODUCT LABELS - FOR EXAMPLE, R-VALUES OF INSULATION PRINTED DIRECTLY ON THE INSULATION, STRIPING CODES, MANUFACTURERS' LABELS ON WINDOWS
  - CONTRACTOR STATEMENTS CERTIFYING THE PRODUCTS THEY HAVE INSTALLED
  - CHECK WITH YOUR LOCAL BUILDING OFFICIAL FOR REQUIREMENTS ON CERTIFYING BUILDING COMPONENTS IN YOUR JURISDICTION.

CERTIFYING INSTALLED INSULATION
- FOR BLOWN OR SPRAYED INSULATION, THE INITIAL INSTALLED THICKNESS, SETTLED THICKNESS, COVERAGE AREA, AND NUMBER OF BAGS USED MUST BE CLEARLY POSTED AT THE JOB SITE.
- FOR COMPONENTS HAVING A MANUFACTURER'S GUARANTEED R-VALUE RATING, THICKNESS MARKERS MUST BE PLACED AT LEAST EVERY 300 FEET.
- FOR COMPONENTS WITHOUT A MANUFACTURE'S GUARANTEED R-VALUE RATING, CONTACT THE INSULATION CONTRACTORS ASSOCIATION OF AMERICA FOR AN APPROVED WAY TO ENSURE PROPER INSULATION LEVELS ARE OBTAINED.
- ALL INSULATION REQUIREMENTS ASSUME THE INSULATION IS INSTALLED AT ITS STANDARD THICKNESS. IF INSULATION IS COMPRESSED, THE R-VALUE IS REDUCED AND THE BUILDING MAY NOT MEET THE REQUIREMENTS.

FIBERGLASS BATT INSULATION R-VALUES AND STANDARD THICKNESSES

INSULATION R-VALUE	STANDARD THICKNESS
R-11	3-1/2"
R-13	3-5/8"
R-15	3-1/2"
R-19	6-1/4"
R-21	5-1/2"
R-22	6-1/4"
R-30	9-1/2"
R-38	12"

PRESCRIPTIVE APPROACH FOR ELECTRICAL LIGHTING: IECC 2009

SECTION 404 ELECTRICAL POWER AND LIGHTING SYSTEMS

404.1 LIGHTING EQUIPMENT (PRESCRIPTIVE).
A MINIMUM OF 50 PERCENT OF LAMPS IN PERMANENTLY INSTALLED LIGHT FIXTURES SHALL BE HIGH-EFFICACY LAMPS.

MANDATORY ENVELOPE REQUIREMENTS: IECC 2009

401.3 CERTIFICATE.
A PERMANENT CERTIFICATE SHALL BE POSTED ON OR IN THE ELECTRICAL DISTRIBUTION PANEL. THE CERTIFICATE SHALL NOT COVER OR OBSTRUCT THE VISIBILITY OF THE CIRCUIT DIRECTORY LABEL, SERVICE DISCONNECT LABEL OR OTHER REQUIRED LABELS.THE CERTIFICATE SHALL BE COMPLETED BY THE BUILDER OR REGISTERED DESIGN PROFESSIONAL. THE CERTIFICATE SHALL LIST THE PREDOMINANT R-VALUES OF INSULATION INSTALLED IN OR ON CEILING/ROOF, WALLS, FOUNDATION (SLAB, BASEMENT WALL, CRAWLSPACE WALL AND/OR FLOOR) AND DUCTS OUTSIDE CONDITIONED SPACES; U-FACTORS FOR FENESTRATION; AND THE SOLAR HEAT GAIN COEFFICIENT (SHGC) OF FENESTRATION. WHERE THERE IS MORE THAN ONE VALUE FOR EACH COMPONENT, THE CERTIFICATE SHALL LIST THE VALUE COVERING THE LARGEST AREA. THE CERTIFICATE SHALL LIST THE TYPES AND EFFICIENCIES OF HEATING, COOLING AND SERVICE WATER HEATING EQUIPMENT. WHERE GAS-FIRED UNVENTED ROOM HEATER,ELECTRIC FURNACE,OR BASEBOARD ELECRIC HEATER IS INSTALLED IN THE RESIDENCE, THE CERTIFICATE SHALL LIST "GAS-FIRED UNVENTED ROOM HEATER," "ELECTRIC FURANCE" OR "BASEBOARD ELECTRIC HEATER," AS APPROPRIATE. AN EFFICIENCY SHALL NOT BE LISTED FOR GAS-FIRED UNVENTED ROOM HEATERS, ELECTRIC FURNACES OR ELECTRIC BASEBOARD HEATERS.

402.4 AIR LEAKAGE. (MANDATORY).

402.4.1 BUILDING THERMAL ENVELOPE.
THE BUILDING THERMAL ENVELOPE SHALL BE DURABLY SEALED TO LIMIT INFILTRATION. THE SEALING METHODS BETWEEN DISSIMILAR MATERIALS SHALL ALLOW FOR DIFFERENTIAL EXPANSION AND CONTRACTION. THE FOLLOWING SHALL BE CAULKED, GASKETED, WEATHERSTRIPPED OR OTHERWISE SEALED WITH AN AIR BARRIER MATERIAL, SUITABLE FILM OR SOLID MATERIAL:
1. ALL JOINTS, SEAMS AND PENETRATIONS.
2. SITE-BUILT WINDOWS, DOORS AND SKYLIGHTS.
3. OPENINGS BETWEEN WINDOW AND DOOR ASSEMBLIES AND THEIR RESPECTIVE JAMBS AND FRAMING.
4. UTILITY PENETRATIONS.
5. DROPPED CEILINGS OR CHASES ADJACENT TO THE THERMAL ENVELOPE.
6. KNEE WALLS.
7. WALLS AND CEILINGS SEPARATING A GARAGE FROM CONDITIONED SPACES.
8. BEHIND TUBS AND SHOWERS ON EXTERIOR WALLS.
9. COMMON WALLS BETWEEN DWELLING UNITS.
10. ATTIC ACCESS OPENINGS.
11. RIM JOIST FUNCTION
10. OTHER SOURCES OF INFILTRATION.

402.4.2 AIR SEALING AND INSULATION.
BUILDING ENVELOPE AIR TIGHTNESS AND INSULATION INSTALLATION SHALL BE DEMONSTATED TO COMPLY WITH ONE OF THE FOLLOWING OPTIONS GIVEN BY SECTION 402.4.2.1 OR 402.4.2.2:

402.4.2.1 TESTING OPTION.
BUILDING ENVELOPE TIGHTNESS AND INSULATION INSTALLATION SHALL BE CONSIDERED ACCAPTABLE WHEN TESTED AIR LEAKAGE IS LESS THAN SEVEN AIR CHANGES PER HOUR (ACH) WHEN TESTED WITH A BLOWER DOOR AT A PRESSURE OF 33.5 PSF (50 PA). TESTING SHALL OCCUR AFTER ROUGH IN AND AFTER INSTALLATION OF PENETRATIONS FOR UTILITIES, PLUMBING, ELECTRICAL, VENTALATION AND COMBUSTION APPLIANCES.

DURING TESTING:
1. EXTERIOR WINDOWS AND DOORS, FIREPLACE AND STOVE DOORS SHALL BE CLOSED, BUT NOT SEALED.
2. DAMPERS SHALL BE CLOSED, BUT NOT SEALED, INCLUDING EXHAUST, INTAKE, MAKEUP AIR, BACKDRAFT AND FLUE DAMPERS;
3. INTERIOR DOORS SHALL BE OPEN;
4. EXTERIOR OPENINGS FOR CONTINUOUS VENTILATION SYSTEMS AND HEAT RECOVERY VENTILATORS SHALL BE CLOSED AND SEALED;
5. HEATING AND COOLING SYSTEM(S) SHALL BE TURNED OFF;
6. HVAC DUCTS SHALL BE NOT BE SEALED; AND
7. SUPPLY AND RETURN REGISTERS SHALL NOT BE SEALED.

404.4.2.2 VISUAL INSPECTION OPTION.
BUILDING ENVELOPE TIGHTNESS AND INSULATION INSTALLATION SHALL BE CONSIDERED ACCEPTABLE WHEN THE ITEMS LISTED IN TABLE 402.41.2, APPLICABLE TO THE METHOD OF CONSTRUCTION, ARE FIELD VERIFIED. WHERE REQUIRED BY THE CODE OFFICIAL, AN APPROVED PARTY INDEPENDENT FROM THE INSTALLER OF THE INSULATION SHALL INSPECT TH AIR BARRIER AND INSULATION.

402.4.3 FIREPLACES.
NEW WOOD-BURNING FIREPLACES SHALL BE GASKETED DOORS AND OUTDOOR COMBUSTION AIR.

402.4.4 FENESTRATION AIR LEAKAGE.
WINDOWS, SKYLIGHTS AND SLIDING GLASS DOORS SHALL HAVE AN AIR INFILTRATION RATE OF NO MORE THAN 0.3 CFM PER SQUARE FOOT (1.5 L/S/M²), AND SWINGING DOORS NO MORE THAN 0.5 CFM PER SQUARE FOOT (2.6 L/S/M²). WHEN TESTED ACCORDING TO NFRC 400 OR AAMA/WDMA/ CSA101/I.S.2/A440 BY AN ACCREDITED, INDEPENDENT LABORATORY AND LISTED AND LABELED BY THE MANUFACTURER.

EXCEPTIONS: SITE-BUILT WINDOWS, SKYLIGHTS AND DOORS.

402.4.5 RECESSED LIGHTING.
RECESSED LUMINAIRES INSTALLED IN THE BUILDING THERMAL ENVELOPE SHALL BE SEALED TO LIMIT AIR LEAKAGE BETWEEN CONDITIONED AND UNCONDITIONED SPACES. ALL RECESSED LUMINARES SHALL BE IC-RATED AND LABELED AS MEETING ASTM E 283 WHEN TESTED AT 1.57 PSF (75 PA) PRESSURE DIFFERENTIAL WITH NO MORE THAN 2.0 CFM (0.944 L/S) OF AIR MOVEMENT FROM THE CONDITIONED SPACE TO THE CEILING CAVITY. ALL RECESSED LUMINARES SHALL BE SEALED WITH A GASKET OR CAULK BETWEEN THE HOUSING AND THE INTERIOR WALL OR CEILING COVERING.

402.5 MAXIMUM FENESTRATION U-FACTOR AND SHGC (MANDATORY).
THE AREA-WEIGHTED AVERAGE MAXIMUM FENESTRATION U-FACTOR PERMITTED USING TRADE- OFFS FROM SECTION 402.1.4 OR 404 SHALL BE 0.48 IN ZONES 4 AND 5 AND 0.40 IN ZONE 6 THROUGH 8 FOR VERTICAL FENSTRATION, AND 0.75 IN ZONE 4 THROUGH 8 FOR SKYLIGHTS. THE AREA-WEIGHTED AVERAGE MAXIMUM FENESTRATION SHGC PERMITTED USING TRADE-OFFS FROM SECTION 405 IN ZONES 1 THROUGH 3 SHALL BE 0.50.

HGE CONSULTING, INC.
MEP ENGINEERS
F-7762
15603 GLEN CHASE
HOUSTON, TEXAS 77095
PHONE: 281-856-7682
FAX: 281-856-2438
Email:
MEP@HGECONSULTING.COM

IF ANY OR ALL OF THIS DOCUMENT IS REPRODUCED, MODIFIED OR WRONGLY DISTRIBUTED YOU WILL BE IN VIOLATION OF CONTRACT AND INFRINGEMENT OF COPYRIGHT LAWS. IF YOU FEEL THAT THIS DOCUMENT HAS REACHED YOU IN ERROR PLEASE CONTACT THE ABOVE OWNER AND DESTROY THE DOCUMENT. IF YOU CHOSE NOT TO DO SO, YOU WILL BE SUBJECT TO PROSECUTION UNDER THE CURRENT COPYRIGHT LAWS.

NUMBER	DATE	DESCRIPTION	BY:

KINGSLAND APTS.

HARRIS COUNTY, TEXAS

- ○ PROGRESS SET
- ○ PERMIT ISSUE
- ● CONSTRUCTION ISSUE

DATE:	08/17/2015
DRAWN BY:	JA
CHK'D BY:	JV
JOB :	919-15

MEP-0.2

ENERGY COMPLIANCE (COMMERCIAL)

MANDATORY MECHANICAL REQUIREMENTS: IECC 2009

503.2 PROVISIONS APPLICABLE TO ALL MECHANICAL SYSTEMS.(MANDATORY).

503.2.1 CALCULATION OF HEATING AND COOLING LOADS.
DESIGN LOADS SHALL BE DETERMINED IN ACCORDANCE WITH THE PROCEDURES DESCRIBED IN THE ASHRAE/ ACCA STANDARD 183. HEATING AND COOLING LOADS SHALL BE ADJUSTED TO ACCOUNT FOR LOAD REDUCTIONS THAT ARE ACHIEVED WHEN ENERGY RECOVERY SYSTEMS ARE UTILIZED IN THE HVAC SYSTEM IN ACCORDANCE WITH THE ASHRAE HVAC SYSTEMS AND EQUIPMENT HANDBOOK. ALTERNATIVELY, DESIGN LOADS SHALL BE DETERMINED BY AN APPROVED EQUIVALENT COMPUTATION PROCEDURE, USING THE DESIGN PARAMETERS SPECIFIED IN CHAPTER 3.

503.2.2 EQUIPMENT AND SYSTEM SIZING.
EQUIPMENT AND SYSTEM SIZING. HEATING AND COOLING EQUIPMENT AND SYSTEMS CAPACITY SHALL NOT EXCEED THE LOADS CALCULATED IN ACCORDANCE WITH SECTION 503.2.1.A SINGLE PIECE OF EQUIPMENT PROVIDING BOTH HEATING AND COOLING MUST SATISFY THIS PROVISION FOR ONE FUNCTION WITH THE CAPACITY FOR THE OTHER FUNCTION AS SMALL AS POSSIBLE, WITHIN AVAILABLE EQUIPMENT OPTIONS.

EXCEPTIONS:
1. REQUIRED STANDBY EQUIPMENT AND SYSTEMS PROVIDED WITH CONTROLS AND DEVICES THAT ALLOW SUCH SYSTEMS OR EQUIPMENT TO OPERATE AUTOMATICALLY ONLY WHEN THE PRIMARY EQUIPMENT IS NOT OPERATING.
2. MULTIPLE UNITS OF THE SAME EQUIPMENT TYPE WITH COMBINED CAPACITIES EXCEEDING THE DESIGN LOAD AND PROVIDED WITH CONTROLS THAT HAVE THE CAPABILITY TO SEQUENCE THE OPERATION OF EACH UNIT BASED ON LOAD.

503.2.3 HVAC EQUIPMENT PERFORMANCE REQUIREMENTS.
EQUIPMENT SHALL MEET THE MINIMUM EFFICIENCY REQUIREMENTS OF TABLES 503.2.3(1), 503.2.3(2), 503.2.3(3), 503.2.3(4), 503.2.3(5), 503.2.3(6), 503.2.3(7) WHEN TESTED AND RATED IN ACCORDANCE WITH THE APPLICABLE TEST PROCEDURE. THE EFFICIENCY SHALL BE VERIFIED THROUGH CERTIFICATION UNDER AN APPROVED CERTIFICATION PROGRAM OR, IF NO CERTIFICATION PROGRAM EXISTS, THE EQUIPMENT EFFICIENCY RATINGS SHALL BE SUPPORTED BY DATA FURNISHED BY THE MANUFACTURER. WHERE MULTIPLE RATING CONDITIONS OR PERFORMANCE REQUIREMENTS ARE PROVIDED, THE EQUIPMENT SHALL SATISFY ALL STATED REQUIREMENTS. WHERE COMPONENTS, SUCH AS INDOOR OR OUTDOOR COILS, FROM DIFFERENT MANUFACTURERS ARE USED, CALCULATIONS AND SUPPORTING DATA SHALL BE FURNISHED BY THE DESIGNER THAT DEMONSTRATES THAT THE COMBINED EFFICIENCY OF THE SPECIFIED COMPONENTS MEETS THE REQUIREMENTS HEREIN.

EXCEPTION: WATER-COOLED CENTRIFUGAL WATER-CHILLING PACKAGES LISTED IN TABLE 503.2.3(7) NOT DESIGNED FOR OPERATION AT ARHI STANDARD 550/590 TEST CONDITIONS OF 44°F (7°C) LEAVING CHILLED WATER TEMPERATURE AND 85°F (29°C) ENTERING CONDENSER WATER TEMPERATURE SHALL HAVE A MAXIMUM FULL LOAD AND NPLV RATING ADJUSTED USING THE FOLLOWING EQUATIONS:

ADJUSTED MAXIMUM FULL LOAD KW/TON RATING =[FULL LOAD KW/TON FROM TABLE 503.2.3(7)]/K_{ADJ}
ADJUSTED MAXIMUM NPLV RATING = [IPLV FROM TABLE 503.2.3(7)]/K_{ADJ}
WHERE:
$K_{ADJ} = 6.174722 - 0.303668(X) + 0.00629466(X)^2$

$X = DT_{STD} + LIFT$
DT_{STD} = {24+[FULL LOAD KW/TON FROM TABLE 503.2.3(7)]X6.83}/FLOW

FLOW = CONDENSER WATER FLOW (GPM)/COOLOING FULL LOAD CAPACITY(TONS)
LIFT = CEWT-CLWT(°F)
CLWT = FULL LOAD LEAVING CHILLED WATER TEMPERATURE (°F)

THE ADJUSTED FULL LOAD AND NPLV VALUES ARE ONLY APPLICABLE OVER THE FOLLOWING FULL-LOAD DESIGN RANGES:
MINIMUM LEAVING CHILLED WATER TEMPERATURE: 38°F (3.3°C)
MAXIMUM CONDENSER ENTERING WATER TEMPERATURE: 102°F (38.9°C)
CONDENSING WATER FLOW: 1 TO 6 GPM/TON 0.018 TO 0.1076 1/S X KW) AND X

TABLE 503.2.3(1) THROUGH TABLE 503.2.7(7) AS APPLICABLE.

503.2.4 HVAC SYSTEM CONTROLS.
EACH HEATING AND COOLING SYSTEM SHALL BE PROVIDED WITH THERMOSTATIC CONTROLS AS REQUIRED IN SECTION 503.2.4.1, 503.2.4.2, 503.2.4.3, 503.2.4.4, 503.4.1, 503.4.2, 503.4.3 OR 503.4.4.

503.2.4.1 THERMOSTATIC CONTROLS.
THE SUPPLY OF HEATING AND COOLING ENERGY TO EACH ZONE SHALL BE CONTROLLED BY INDIVIDUAL THERMOSTATIC CONTROLS CAPABLE OF RESPONDING TO TEMPERATURE WITHIN THE ZONE. WHERE HUMIDIFICATION OR DEHUMIDIFICATION OR BOTH IS PROVIDED, AT LEAST ONE HUMIDITY CONTROL DEVICE SHALL BE PROVIDED FOR EACH HUMIDITY CONTROL SYSTEM.

EXCEPTION: INDEPENDENT PERIMETER SYSTEMS THAT ARE DESIGNED TO OFFSET ONLY BUILDING ENVELOPE HEAT LOSSES OR GAINS OR BOTH SERVING ONE OR MORE PERIMETER ZONES ALSO SERVED BY AN INTERIOR SYSTEM PROVIDED:

1. THE PERIMETER SYSTEM INCLUDES AT LEAST ONE THERMOSTATIC CONTROL ZONE FOR EACH BUILDING EXPOSURE HAVING EXTERIOR WALLS FACING ONLY ONE ORIENTATION (WITHIN +/- 45 DEGREES) (0.8 RAD) FOR MORE THAN 50 CONTIGUOUS FEET (15.2 M); AND
2. THE PERIMETER SYSTEM HEATING AND COOLING SUPPLY IS CONTROLLED BY A THERMOSTAT(S) LOCATED WITHIN THE ZONE(S) SERVED BY THE SYSTEM.

503.2.4.1.1 HEAT PUMP SUPPLEMENTARY HEAT.
HEAT PUMPS HAVING SUPPLEMENTARY ELECTRIC RESISTANCE HEAT SHALL HAVE CONTROLS THAT, EXCEPT DURING DEFROST, PREVENT SUPPLEMENTARY HEAT OPERATION WHEN THE HEAT PUMP CAN MEET THE HEATING LOAD.

503.2.4.2 SET POINT OVERLAP RESTRICTION.
WHERE USED TO CONTROL BOTH HEATING AND COOLING, ZONE THERMOSTATIC CONTROLS SHALL PROVIDE A TEMPERATURE RANGE OR DEADBAND OF AT LEAST 5°F (2.8°C) WITHIN WHICH THE SUPPLY OF HEATING AND COOLING ENERGY TO THE ZONE IS CAPABLE OF BEING SHUT OFF OR REDUCED TO A MINIMUM.

EXCEPTION: THERMOSTATS REQUIRING MANUAL CHANGEOVER BETWEEN HEATING AND COOLING MODES.

503.2.4.3 OFF-HOUR CONTROLS.
EACH ZONE SHALL BE PROVIDED WITH THERMOSTATIC SETBACK CONTROLS THAT ARE CONTROLLED BY EITHER AN AUTOMATIC TIME CLOCK OR PROGRAMMABLE CONTROL SYSTEM.

503.2.4.3 OFF-HOUR CONTROLS.
EACH ZONE SHALL BE PROVIDED WITH THERMOSTATIC SETBACK CONTROLS
THAT ARE CONTROLLED BY EITHER AN AUTOMATIC TIME CLOCK OR PROGRAMMABLE CONTROL SYSTEM.

EXCEPTIONS:

1. ZONES THAT WILL BE OPERATED CONTINUOUSLY.

2. ZONES WITH A FULL HVAC LOAD DEMAND NOT EXCEEDING 6,800 BTU/H (2 KW) AND HAVING A READILY ACCESSIBLE MANUAL SHUTOFF SWITCH.

503.2.4.3.1 THERMOSTATIC SETBACK CAPABILITIES.
THERMOSTATIC SETBACK CONTROLS SHALL HAVE THE CAPABILITY TO SET BACK OR TEMPORARILY OPERATE THE SYSTEM TO MAINTAIN ZONE TEMPERATURES DOWN TO 55°F (13°C) OR UP TO 85°F (29°C).

503.2.4.3.2 AUTOMATIC SETBACK AND SHUTDOWN CAPABILITIES.
AUTOMATIC TIME CLOCK OR PROGRAMMABLE CONTROLS SHALL BE CAPABLE OF STARTING AND STOPPING THE SYSTEM FOR SEVEN DIFFERENT DAILY SCHEDULES PER WEEK AND RETAINING THEIR PROGRAMMING AND TIME SETTING DURING A LOSS OF POWER FOR AT LEAST 10 HOURS. ADDITIONALLY, THE CONTROLS SHALL HAVE A MANUAL OVERRIDE THAT ALLOWS TEMPORARY OPERATION OF THE SYSTEM FOR UP TO 2 HOURS; A MANUALLY OPERATED TIMER CAPABLE OF BEING ADJUSTED TO OPERATE THE SYSTEM FOR UP TO 2 HOURS; OR AN OCCUPANCY SENSOR.

503.2.4.4 SHUTOFF DAMPER CONTROLS.
BOTH OUTDOOR AIR SUPPLY AND EXHAUST DUCTS SHALL BE EQUIPPED WITH MOTORIZED DAMPERS THAT WILL AUTOMATICALLY SHUT WHEN THE SYSTEMS
OR SPACES SERVED ARE NOT IN USE.

EXCEPTIONS:

1. GRAVITY DAMPERS SHALL BE PERMITTED IN BUILDINGS LESS THAN THREE STORIES IN HEIGHT.
2. GRAVITY DAMPERS SHALL BE PERMITTED FOR BUILDINGS OF ANY HEIGHT LOCATED IN CLIMATE ZONES 1, 2, AND 3.
3. GRAVITY DAMPERS SHALL BE PERMITTED FOR OUTSIDE AIR INTAKE OR EXHAUST AIRFLOWS OF 300 CFM (.14 M3/S) OR LESS.

503.2.4.5 SNOW MELT SYSTEM COONTROLS.
SNOW- AND ICE-MELTING SYSTEMS, SUPPLIED THROUGH ENERGY SERVICE TO THE BUILDING, SHALL INCLUDE AUTOMATIC CONTROLS CAPABLE OF SHUTTING OFF THE SYSTEM WHEN THE PAVEMENT TEMPERATURE IS ABOVE 50°F (10°C) AND NO PERCIPITATION IS FALLING AND AN AUTOMATIC OR MANUAL CONTROL THAT WILL ALLOW SHUTOFF WHEN THE OUTDOOR TEMPERATURE IS ABOVE 40°F (4°C) SO THAT THE POTENTIAL FOR SNOW OR ICE ACCUMILATION IS NEGLIGIBLE.

503.2.5 VENTILATION.
VENTILATION, EITHER NATURAL OR MECHANICAL,SHALL BE PROVIDED IN ACCORDANCE WITH CHAPTER 4 OF THE INTERNATIONAL MECHANICAL CODE. WHERE MECHANICAL VENTILATION IS PROVIDED, THE SYSTEM SHALL PROVIDE THE CAPABILITY TO REDUCE THE OUTDOOR AIR SUPPLY TO THE MINIMUM REQUIRED BY CHAPTER 4 OF THE INTERNATIONAL MECHANICAL CODE.

503.2.5.1 DEMAND CONTROLLED VENTILLATION.
DEMAND CONTROL VENTILATION (DCV) IS REQUIRED FOR SPACES LARGER
THAN 500 FT^2 (50 M^2)AND WITH AN AVERAGE OCCUPANT LOAD OF 40 PEOPLE PER 1000 FT^2 (93 M^2)OF FLOOR AREA (AS ESTABLISHED IN TABLE 403.3 OF THE INTERNATIONAL MECHANICAL CODE) AND SERVED BY SYSTEMS WITH ONE OR MORE OF THE FOLLOWING:

1. AN AIR-SIZED ECONOMIZER;

2. AUTOMATIC MODULATING CONTROL OF THE OUTDOOR AIR DAMPER; OR
3. A DESIGN OUTDOOR AIRFLOW GREATER THAN 3000 CFM (1400 L/S).

EXCEPTIONS:

1. SYSTEMS WITH AN ENERGY RECOVERY COMPLYING WITH SECTION 503.2.6.
2. MULTIPLE-ZONE SYSTEMS WITHOUT DIRECT DIGITAL CONTROL OF INDIVIDUAL ZONES COMMUNICATING WITH A CENTRAL CONTROL PANEL.
3. SYSTEM WITH A DESIGN OUTDOOR AIRFLOW LESS THAN 1200 CFM (600 L/S).
4. SPACES WITH THE SUPPLY AIRFLOW RATE MINUS ANY MAKEUP OR OUTGOING TRANSFER AIR REQUIREMENT IS LESS THAN 1200 CFM (600 L/S).

503.2.6 ENERGY RECOVERY VENTILATION SYSTEMS.
INDIVIDUAL FAN SYSTEMS THAT HAVE BOTH A DESIGN SUPPLY AIR CAPACITY OF 5,000 CFM (2.36 M^3/S) OR GREATER OF THE DESIGN SUPPLY AIR QUANTITY SHALL HAVE AN ENERGY RECOVERY SYSTEM THAT PROVIDES A CHANGE IN THE ENTHALPY OF THE OUTDOOR AIR SUPPLY OF 50 PERCENT
OR MORE OF THE DIFFERENCE BETWEEN THE OUTDOOR AIR AND RETURN AIR AT DESIGN CONDITIONS. PROVISION SHALL BE MADE TO BYPASS OR CONTROL THE ENERGY RECOVERY SYSTEM TO PERMIT COOLING WITH OUTDOOR AIR WHERE COOLING WITH OUTDOOR AIR IS REQUIRED.

EXCEPTION: AN ENERGY RECOVERY VENTILATION SYSTEM SHALL NOT BE REQUIRED IN ANY OF THE FOLLOWING CONDITIONS:

1. WHERE ENERGY RECOVERY SYSTEMS ARE PROHIBITED BY THE INTERNATIONAL MECHANICAL CODE.
2. LABORATORY FUME HOOD SYSTEMS THAT INCLUDE AT LEAST ONE OF THE FOLLOWING FEATURES:
2.1.VARIABLE-AIR-VOLUME HOOD EXHAUST AND ROOM SUPPLY SYSTEMS CAPABLE OF REDUCING EXHAUST AND MAKEUP AIR VOLUME TO 50 PERCENT OR LESSOF DESIGN VALUES.
2.2.DIRECT MAKEUP (AUXILARY) AIR SUPPLY EQUAL TO AT LEAST 75 PERCENT OF THE EXHAUST RATE, HEATED NO WARMER THAN 2°F (1.1°C) BELOW ROOM SETPOINT, COOLED TO NO COOLER THAN 3°F (1.7°C) ABOVE ROOM SETPOINT, NO DEHUMIDIFICATION CONTROL.
3. SYSTEMS SERVING SPACES THAT ARE NOT COOLED AND ARE HEATED TO LESS THAN 60°F (15.5°C).
4. WHERE MORE THAN 60 PERCENT OF THE OUTDOOR HEATING ENERGY IS PROVIDED FROM SITE-RECOVERED OR SITE SOLAR ENERGY.
5. HEATING SYSTEMS IN CLIMATES WITH LESS THAN 3600 HDD.
6. COOLING SYSTEMS IN CLIMATES WITH A 1 PERCENT COOLING DESIGN WET BULB TEMPERATURE LESS THAN 64°F (18°C).
7. SYSTEMS REQUIRING DEHUMIDIFICATION THAT EMPLOY SERIES-STYLE ENERGY RECOVERY COILS WRAPPED AROUND THE COOLING COIL.

503.2.7 DUCT AND PLENUM INSULATION AND SEALING.
ALL SUPPLY AND RETURN AIR DUCTS AND PLENUMS SHALL BE INSULATED WITH A MINIMUMOF R-5 INSULATION WHEN LOCATED IN UNCONDITIONED SPACES AND WITH A MINIMUM OF R-8 INSULATION WHEN LOCATED OUTSIDE THE BUILDING. WHEN LOCATED WITHIN A BUILDING ENVELOPE ASSEMBLY, THE DUCT OR PLENUM SHALL BE SEPARATED FROM THE BUILDING EXTERIOR OR UNCONDITIONED OR EXEMPT SPACES BY A MINIMUM OF R-8 INSULATION.

EXCEPTIONS:

1. WHEN LOCATED WITHIN EQUIPMENT.

2. WHEN THE DESIGN TEMPERATURE DIFFERENCE BETWEEN THE INTERIOR AND EXTERIOR OF THE DUCT OR PLENUM DOES NOT EXCEED 15°F (8°C).
ALL DUCTS, AIR HANDLERS AND FILTER BOXES SHALL BE SEALED. JOINTS AND SEAMS SHALL COMPLY WITH SECTION 603.9 OF THE INTERNATIONAL MECHANICAL CODE.

503.2.7.1 DUCT CONSTRUCTION.
DUCTWORK SHALL BE CONSTRUCTED AND ERECTED IN ACCORDANCE WITH THE INTERNATIONAL MECHANICAL CODE.

503.2.7.1.1 LOW-PRESSURE DUCT SYSTEMS.
ALL LONGITUDINAL AND TRANSVERSE JOINTS, SEAMS AND CONNECTIONS OF SUPPLY AND RETURN DUCTS OPERATING AT A STATIC PRESSURE LESS THAN OR EQUAL TO 2 INCHES W.G. (500 PA) SHALL BE SECURELY FASTENED AND SEALED WITH WELDS, GASKETS, MASTICS (ADHESIVES), MASTIC-PLUS-EMBEDDED-FABRIC SYSTEMS OR TAPES INSTALLED IN ACCORDANCE WITH THE MANUFACTURER'S INSTALLATION INSTRUCTIONS. PRESSURE CLASSIFICATIONS SPECIFIC TO THE DUCT SYSTEM SHALL BE CLEARLY INDICATED ON THE CONSTRUCTION DOCUMENTS IN ACCORDANCE WITH THE INTERNATIONAL MECHANICAL CODE.
EXCEPTION: CONTINUOUSLY WELDED AND LOCKING-TYPE LONGITUDINAL JOINTS AND SEAMS ON DUCTS OPERATING AT STATIC PRESSURES LESS THAN 2 INCHES W.G. (500 PA) PRESSURE CLASSIFICATION.

503.2.7.1.2 MEDIUM-PRESSURE DUCT SYSTEMS.
ALL DUCTS AND PLENUMS DESIGNED TO OPERATE AT A STATIC PRESSURE GREATER THAN 2 INCHESW.G. (500 PA) BUT LESS THAN 3 INCHES W.G. (750 PA) SHALL BE INSULATED AND SEALED IN ACCORDANCE WITH SECTION 503.2.7. PRESSURE CLASSIFICATIONS SPECIFIC TO THE DUCT SYSTEM SHALL BE CLEARLY INDICATED ON THE CONSTRUCTION DOCUMENTS IN ACCORDANCE WITH THE INTERNATIONAL MECHANICAL CODE.

503.2.7.1.3 HIGH-PRESSURE DUCT SYSTEMS.
DUCTS DESIGNED TO OPERATE AT STATIC PRESSURES IN EXCESS OF 3 INCHES W.G. (746 PA) SHALL BE INSULATED AND SEALED IN ACCORDANCE WITH SECTION 503.2.7. IN ADDITION, DUCTS AND PLENUMS SHALL BE LEAK-TESTED IN ACCORDANCE WITH THE SMACNA HVAC AIR DUCT LEAKAGE TEST MANUAL WITH THE RATE OF AIR LEAKAGE (CL) LESS THAN OR EQUAL TO 6.0 AS DETERMINED IN ACCORDANCE WITH EQUATION 5-2.

$CL=F\times P^{0.65}$ (EQUATION 5-2)

WHERE:

F = THE MEASURED LEAKAGE RATE IN CFM PER 100 SQUARE FEET OF DUCT SURFACE.
P = THE STATIC PRESSURE OF THE TEST.

DOCUMENTATION SHALL BE FURNISHED BY THE DESIGNER DEMONSTRATING THAT REPRESENTATIVE SECTIONS TOTALING AT LEAST 25 PERCENT OF THE DUCT AREA HAVE BEEN TESTED AND THAT ALL TESTED SECTIONS MEET THE REQUIREMENTS OF THIS SECTION.

503.2.8 PIPING INSULATION.
ALL PIPING SERVING AS PART OF A HEATING OR COOLING SYSTEM SHALL BE THERMALLY INSULATED IN ACCORDANCE WITH TABLE 503.2.8.

EXCEPTIONS:

1. FACTORY-INSTALLED PIPING WITHIN HVAC EQUIPMENT TESTED AND RATED IN ACCORDANCE WITH A TEST PROCEDURE REFERENCED BY THIS CODE.

2. FACTORY-INSTALLED PIPING WITHIN ROOM FAN-COILS AND UNIT VENTILATORS TESTED AND RATED ACCORDING TO AHRI 440 (EXCEPT THAT THE SAMPLING AND VARIATION PROVISIONS OF SECTION 6.5 SHALL NOT APPLY) AND 840, RESPECTIVELY.

3. PIPING THAT CONVEYS FLUIDS THAT HAVE A DESIGN OPERATING TEMPERATURE RANGE BETWEEN 55°F (13°C) AND 105°F (41°C).

4. PIPING THAT CONVEYS FLUIDS THAT HAVE NOT BEEN HEATED OR COOLED THROUGH THE USE OF FOSSIL FUELS OR ELECTRIC POWER.

5. RUNOUT PIPING NOT EXCEEDING 4 FEET (1219 MM) IN LENGTH AND 1 INCH (25 MM)IN DIAMETER BETWEEN THE CONTROL VALVE AND HVAC COIL.

TABLE 503.2.8

MINIMUM PIPE INSULATION
(THICKNESS IN INCHES)

FLUID	NOMINAL PIPE DIAMETER	
	<1.5"	≥ 1.5"
STEAM	1½	3
HOT WATER	1	2
CHILLED WATER, BRINE OR REFRIGERANT	1½	1½

FOR SI: 1 INCH = 25.4 mm,
A. BASED ON INSULATION HAVING A CONDUCTIVITY (K) NOT EXCEEDING 0.27 BTU PER INCH/H · FT^2 · °F.
B. FOR INSULATION WITH A THERMAL CONDUCTIVITY NOT EQUAL TO 0.27 BTU · INCH/H · FT^2· °F AT A MEAN TEMPERATURE OF 75°F, THE MINUMUM REQUIRED PIPE THICKNESS IS ADJUSTED USING THE FOLLOWING EQUATION;

T = R[(1+TLR)⅝-1]

WHERE:
T = ADJUSTED INSULATION THICKNESS (IN).
R = ACTUAL PIPE RADIUS (IN).
T = INSULATION THICKNESS FROM APPLICABLE CELL IN TABLE (IN).
K = NEW THERMAL CONDUCTIVITY AT 75° (BTU·IN/H· FT^2· °F).
k = 0.27 BTU· IN/HR· FT^2· °F.

503.2.9 HVAC SYSTEM COMPLETION.
PRIOR TO THE ISSUANCE OF A CERTIFICATE OF OCCUPANCY, THE DESIGN PROFESSIONAL SHALL PROVIDE EVIDENCE OF SYSTEM COMPLETION IN ACCORDANCE WITH SECTIONS 503.2.9.1 THROUGH 503.2.9.3.

503.2.9.1 AIR SYSTEM BALANCING.
EACH SUPPLY AIR OUTLET AND ZONE TERMINAL DEVICE SHALL BE EQUIPPED WITH MEANS FOR AIR BALANCING IN ACCORDANCE WITH THE REQUIREMENTS OF CHAPTER 6 OF THE INTERNATIONAL MECHANICAL CODE. DISCHARGE DAMPERS ARE PROHIBITED ON CONSTANT VOLUME FANS AND VARIABLE VOLUME FANS WITH MOTORS 10 HORSEPOWER (HP) (7.5 KW)AND LARGER.

503.2.9.2 HYDRONIC SYSTEM BALANCING.
INDIVIDUAL HYDRONIC HEATING AND COOLING COILS SHALL BE EQUIPPED WITH MEANS FOR BALANCING AND PRESSURE TEST CONNECTIONS.

503.2.9.3 MANUALS.
THE CONSTRUCTION DOCUMENTS SHALL REQUIRE THAT AN OPERATING AND MAINTENANCE MANUAL BE PROVIDED TO THE BUILDING OWNER BY THE MECHANICAL CONTRACTOR.

THE MANUAL SHALL INCLUDE, AT LEAST, THE FOLLOWING:

1. EQUIPMENT CAPACITY (INPUT AND OUTPUT) AND REQUIRED MAINTENANCE ACTIONS.
2. EQUIPMENT OPERATION AND MAINTENANCE MANUALS.
3. HVAC SYSTEM CONTROL MAINTENANCE AND CALIBRATION INFORMATION, INCLUDING WIRING DIAGRAMS, SCHEMATICS, AND CONTROL SEQUENCE DESCRIPTIONS. DESIRED OR FIELD-DETERMINED SETPOINTS SHALL BE PERMANENTLY RECORDED ON CONTROL DRAWINGS, AT CONTROL DEVICES OR, FOR DIGITAL CONTROL SYSTEMS, IN PROGRAMMING COMMENTS.
4. A COMPLETE WRITTEN NARRATIVE OF HOW EACH SYSTEM IS INTENDED TO OPERATE.

503.2.10 AIR SYSTEM DESIGN AND CONTROL.
EACH HVAC SYSTEM HAVING A TOTAL FAN SYSTEM DESIGN MOTOR NAMEPLATE HORSEPOWER (HP)EXCEDING 5 HORSEPOWER (HP)(3.7KW)SHALL MEET THE PROVISIONS OF SECTION 503.1.10.1 THROUGH 503.2.10.2.

503.2.10.1 ALLOWABLE FAN FLOOR HORSEPOWER.
EACH HVAC SYSTEM AT FAN SYSTEM DESIGN CONDITIONS SHALL NOT EXCEED THE ALLOWABLE FAN SYSTEM MOTOR NAMEPLATE HP (OPTION 1) OR FAN SYSTEM BHP(OPTION 2) AS SHOWN IN TABLE 503.2.10.1(1). THIS INCLUDES SUPPLY FANS, RETURN/RELIEF FANS, AND FAN-POWERED TERMINAL UNITS ASSOCIATED WITH SYSTEMS PROVIDING HEATING OR COOLING CAPABILITY.

EXCEPTIONS:
1. HOSPITAL AND LABORITORY SYSTEMS THA UTILIZE FLOW CONTROL DEVICES ON EXHAUST AND/OR RETURN TO MAINTAIN SPACE PRESSURE RELATIONSHIPS NECESSARY FOR OCCUPANT HEALTH AND SAFETY OR ENVIRONMENTAL CONTROL SHALL BE PERMITTED TO USE VARIABLE VOLUME FAN POWER LIMITATIONS.

2. INDIVIDUAL EXHAUST FANS WITH MOTOR NAMEPLATE HORSEPOWER OF 1 HP (0.7 KW) OR LESS.

3. FANS EXHAUSTING AIR FUME HOODS. (NOTE: IF THIS EXCEPTION IS TAKEN, NO RELATED EXHAUST SIDE CREDITS SHALL BE TAKEN FROM TABLE 503.2.10.1(2).

TABLE 503.2.10.1(1) FAN POWER LIMITATION &
TABLE 503.2.10.1(2) FAN POWER LIMITATION PRESSURE DROP ADJUSTMENT
USE AS APPLICABLE.

503.2.10.2 MOTOR NAMEPLATE HORSEPOWER. FOR EACH FAN, THE SELECTED FAN MOTOR SHALL BE NO LOGER THAN THE FIRST AVAILABLE MOTOR SIZE AVAILABLE MOTOR SIZE GREATER THAN THE BRAKE HORSEPOWER (BHP). THE FAN BRAKE HORSEPOWER (BHP) SHALL BE INDICATED ON THE DESIGN DOCUMENTS TO ALLOW FOR COMPLIANCE VERIFICATION BY THE CODE OFFICIAL.

EXCEPTION:
1. FOR FANS LESS THAN 6 BHP, WHERE THE FIRST AVAILABLE MOTOR LARGER THAN THE BRAKE HORSEPOWER HAS A NAMEPLATE RATING WITH 50 PERCENT OF THE BHP, SELECTION OF THE NEXT LARGER NAMEPLATE MOTOR SIZE IS ALLOWED.

503.2.11 HEATING OUTSIDE A BUILDING.
SYSTEMS INSTALLED TO PROVIDE HEAT OUTSIDE A BUILDING SHALL BE RADIANT SYSTEMS. SUCH HEATING SYSTEMS SHALL BE CONTROLLED BY AN OCCUPANCY SENSING DEVICE OR A TIMER SWITCH, SO THAT THE SYSTEM AUTOMATICALLY DEENERGIZED WHEN NO OCCUPANTS ARE PRESENT.

HGE CONSULTING, INC.
MEP ENGINEERS
F-7762
15603 GLEN CHASE
HOUSTON, TEXAS 77095
PHONE: 281-856-7682
FAX: 281-856-2438
Email:
MEP@HGECONSULTING.COM

IF ANY OR ALL OF THIS DOCUMENT IS REPRODUCED, MODIFIED OR WRONGLY DISTRIBUTED YOU WILL BE IN VIOLATION OF CONTRACT AND INFRINGEMENT OF COPYRIGHT LAWS. IF YOU FEEL YOU HAVE THIS DOCUMENT HAS REACHED YOU IN ERROR PLEASE CONTACT THE ABOVE OWNER AND DESTROY THE DOCUMENT. IF YOU CHOSE NOT TO DO SO, YOU WILL BE SUBJECT TO PROSECUTION UNDER THE CURRENT COPYRIGHT LAWS.

NUMBER	DATE	DESCRIPTION	BY:

KINGSLAND APTS.
HARRIS COUNTY, TEXAS

STATE OF TEXAS
JAIRZINHO VASQUEZ
88666
LICENSED
PROFESSIONAL ENGINEER
08/18/15

○ PROGRESS SET
○ PERMIT ISSUE
● CONSTRUCTION ISSUE

DATE:	08/17/2015
DRAWN BY:	JA
CHK'D BY:	JV
JOB :	919-15

MEP-0.3

ENERGY COMPLIANCE (COMMERCIAL)

MANDATORY ELECTRICAL REQUIREMENTS: IECC 2009

SECTION 505
ELECTRICAL POWER AND LIGHTING SYSTEMS (MANDATORY)

505.1 GENERAL. (MANDATORY).
THIS SECTION COVERS LIGHTING SYSTEM CONTROLS, THE CONNECTION OF BALLASTS, THE MAXIMUM LIGHTING POWER FOR INTERIOR APPLICATIONS, AND MINIMUM ACCEPTABLE LIGHTING EQUIPMENT FOR EXTERIOR APPLICATIONS.

EXCEPTION: LIGHTING WITHIN DWELLING UNITS WHERE 50 PERCENT OR MORE OF THE PERMENANTLEY INSTALLED INTERIOR LIGHT FIXTURES ARE FITTED WITH HIGH-EFFICIENCY LAMPS.

505.2 LIGHTING CONTROLS. (MANDATORY).
LIGHTING SYSTEMS SHALL BE PROVIDED WITH CONTROLS AS REQUIRED IN SECTIONS 505.2.1, 505.2.2 , 505.2.3 AND 505.2.4.

505.2.1 INTERIOR LIGHTING CONTROLS.
EACH AREA ENCLOSED BY WALLS OR FLOOR-TO-CEILING PARTITIONS SHALL HAVE AT LEAST ONE MANUAL CONTROL FOR THE LIGHTING SERVING THAT AREA. THE REQUIRED CONTROLS SHALL BE LOCATED WITHIN THE AREA SERVED BY THE CONTROLS OR BE A REMOTE SWITCH THAT IDENTIFIES THE LIGHTS SERVED AND INDICATES THEIR STATUS.

EXCEPTIONS:

1. AREAS DESIGNATED AS SECURITY OR EMERGENCY AREAS THAT MUST BE CONTINUOUSLY LIGHTED.
2. LIGHTING IN STAIRWAYS OR CORRIDORS THAT ARE ELEMENTS OF THE MEANS OF EGRESS.

505.2.2 ADDITIONAL CONTROLS.
EACH AREA THAT IS REQUIRED TO HAVE A MANUAL CONTROL SHALL HAVE ADDITIONAL CONTROLS THAT MEET THE REQUIREMENTS OF SECTIONS 505.2.2.1 AND 505.2.2.2.

505.2.2.1 LIGHT REDUCTION CONTROLS.
EACH AREA THAT IS REQUIRED TO HAVE A MANUAL CONTROL SHALL ALSO ALLOW THE OCCUPANT TO REDUCE THE CONNECTED LIGHTING LOAD IN A REASONABLY UNIFORM ILLUMINATION PATTERN BY AT LEAST 50 PERCENT. LIGHTING REDUCTION SHALL BE ACHIEVED BY ONE OF THE FOLLOWING OR OTHER APPROVED METHOD:

1. CONTROLLING ALL LAMPS OR LUMINAIRES;
2. DUAL SWITCHING OF ALTERNATE ROWS OF LUMINAIRES, ALTERNATE LUMINAIRES OR ALTERNATE LAMPS;
3. SWITCHING THE MIDDLE LAMP LUMINAIRES INDEPENDENTLY OF THE OUTER LAMPS; OR
4. SWITCHING EACH LUMINAIRE OR EACH LAMP.

EXCEPTIONS:

1. AREAS THAT HAVE ONLY ONE LUMINAIRE.
2. AREAS THAT ARE CONTROLLED BY AN OCCUPANT-SENSING DEVICE.
3. CORRIDORS, STOREROOMS, RESTROOMS OR PUBLIC LOBBIES.
4. SLEEPING UNIT (SEE SECTION 505.2.3).
5. SPACES THAT USE LESS THAN 0.6 WATTS PER SQUARE FOOT (6.5 W/M²).

505.2.2.2 AUTOMATIC LIGHTING SHUTOFF.
BUILDINGS LARGER THAN 5,000 SQUARE FEET (465M²) SHALL BE EQUIPPED WITH AN AUTOMATIC CONTROL DEVICE TO SHUT OFF LIGHTING IN THOSE AREAS. THIS AUTOMATIC CONTROL DEVICE SHALL FUNCTION ON EITHER:

1. A SCHEDULED BASIS, USING TIME-OF-DAY, WITH AN INDEPENDENT PROGRAM SCHEDULE THAT CONTROLS THE INTERIOR LIGHTING IN AREAS THAT DO NOT EXCEED 25,000 SQUARE FEET (2323 M²) AND ARE NOT MORE THAN ONE FLOOR; OR

2. AN OCCUPANT SENSOR THAT SHALL TURN LIGHTING OFF WITHIN 30 MINUTES OF AN OCCUPANT LEAVING A SPACE; OR
3. A SIGNAL FROM ANOTHER CONTROL OR ALARM SYSTEM THAT INDICATES THE AREA IS UNOCCUPIED.

EXCEPTION: THE FOLLOWING SHALL NOT REQUIRE AN AUTOMATIC CONTROL DEVICE:

1. SLEEPING UNIT (SEE SECTION 505.2.3).
2. LIGHTING IN SPACES WHERE PATIENT CARE IS DIRECTLY PROVIDED.
3. SPACES WHERE AN AUTOMATIC SHUTOFF WOULD ENDANGER OCCUPANT SAFETY OR SECURITY.

505.2.2.2.1 OCCUPANT OVERRIDE.
WHERE AN AUTOMATIC TIME SWITCH CONTROL DEVICE IS INSTALLED TO COMPLY WITH SECTION 505.2.2.2, ITEM 1, IT SHALL INCORPORATE AN OVERRIDE SWITCHING DEVICE THAT:

1. IS READILY ACCESSIBLE.
2. IS LOCATED SO THAT A PERSON USING THE DEVICE CAN SEE THE LIGHTS OR THE AREA CONTROLLED BY THAT SWITCH, OR SO THAT THE AREA BEING LIT IS ANNUNCIATED.
3. IS MANUALLY OPERATED.
4. ALLOWS THE LIGHTING TO REMAIN ON FOR NO MORE THAN 2 HOURS WHEN AN OVERRIDE IS INITIATED.
5. CONTROLS AN AREA NOT EXCEEDING 5,000 SQUARE FEET (465 M²).

EXCEPTIONS:
1. IN MALLS AND ARCADES, AUDITORIUMS, SINGLE-TENANT RETAIL SPACES, INDUSTRIAL FACILITIES AND ARENAS, WHERE CAPTIVE-KEY OVERRIDE IS UTILIZED, OVERRIDE TIME MAY EXCEED 2 HOURS.
2. IN MALLS AND ARCADES, AUDITORIUMS, SINGLE-TENANT RETAIL SPACES, INDUSTRIAL FACILITIES AND ARENAS, THE AREA CONTROLLED MAY NOT EXCEED 20,000 SQUARE FEET (1860 M²).

505.2.2.2.2 HOLIDAY SCHEDULING.
IF AN AUTOMATIC TIME SWITCH CONTROL DEVICE IS INSTALLED IN ACCORDANCE WITH SECTION 505.2.2.2, ITEM 1, IT SHALL INCORPORATE AN AUTOMATIC HOLIDAY SCHEDULING FEATURE THAT TURNS OFF ALL LOADS FOR AT LEAST 24 HOURS, THEN RESUMES THE NORMALLY SCHEDULED OPERATION.

EXCEPTION:
RETAIL STORES AND ASSOCIATED MALLS, RESTAURANTS, GROCERY STORES, PLACES OF RELIGIOUS WORSHIP AND THEATERS.

505.2.2.3 DAYLIGHT ZONE CONTROL. DAYLIGHT ZONES, AS DEFINED BY THIS CODE, SHALL BE PROVIDED WITH INDIVIDUAL CONTROLS THAT CONTROL THE LIGHTS INDEPENDENT OF GENERAL AREA LIGHTING. CONTIGUOUS DAY LIGHT ZONES ADJACENT TO VERTICAL FENESTRATION ARE ALLOWED TO BE CONTROLLED BY A SINGLE CONTROLLING DEVICE PROVIDED THAT THEY DO NOT INCLUDE ZONES FACING MORE THAN TWO ADJACENT CARDINAL ORIENTATIONS (I.E.,NORTH, SOUTH, EAST, WEST). DAYLIGHT ZONES UNDER SKYLIGHTS MORE THAN 15 FEET(4572 MM) FROM THE PERIMETER SHALL BE CONTROLLED SEPERATELY FROM DAYLIGHT ZONES ADJACENT TO VETICAL FENESTRATION.

EXCEPTION: DAYLIGHT SPACES ENCLOSED BY WALLS OR CEILING HEIGHT PARTITIONS AND CONTAINING TWO OR FEWER LIGHT FIXTURES ARE NOT REQUIRED TO HAVE A SEPERATE SWITCH FOR GENERAL ARE LIGHTING.

505.2.3 SLEEPING UNIT CONTROLS.
SLEEPING UNITS IN HOTELS, MOTELS, BOARDING HOUSES OR SIMILAR BUILDINGS SHALL HAVE AT LEAST ONE MASTER SWITCH AT THE MAIN ENTRY DOOR THAT CONTROLS ALL PERMANENTLY WIRED LUMINAIRES AND SWITCHED RECEPTACLES, EXCEPT THOSE IN THE BATHROOM(S). SUITES SHALL HAVE A CONTROL MEETING THESE REQUIREMENTS AT THE ENTRY TO EACH ROOM OR AT THE PRIMARY ENTRY TO THE SUITE.

505.2.4 EXTERIOR LIGHTING CONTROLS.
LIGHTING NOT DESIGNATED FOR DUSK-TO-DAWN OPERATION SHALL BE CONTROLLED BY EITHER A COMBINATION OF A PHOTOSENSER AND A TIME SWITCH, OR AN ASTRONOMICAL TIME SWITCH. LIGHTING. LIGHTING DESIGNATED FOR DUSK-TO-DAWN OPERATION SHALL BE CONTROLLED BY AN ASTRONOMICAL TIME SWITCH OR PHOTOSENSOR. ALL TIME SWITCHES SHALL BE CAPABLE OF RETAINING PROGRAMMING AND THE TIME SETTING DURING LOSS OF POWER FOR A PERIOD OF AT LEAST 10 HOURS.

505.3 TANDEM WIRING. (MANDATORY).
THE FOLLOWING LUMINAIRES LOCATED WITHIN THE SAME AREA SHALL BE TANDEM WIRED:

1. FLUORESCENT LUMINAIRES EQUIPPED WITH ONE, THREE OR ODD-NUMBERED LAMP CONFIGURATIONS, THAT ARE RECESS-MOUNTED WITHIN 10 FEET (3048mm)CENTER-TO-CENTER OF EACH OTHER.
2. FLUORESCENT LUMINAIRES EQUIPPED WITH ONE, THREE OR ANY OTHER ODD-NUMBERED LAMP CONFIGURATION, THAT ARE PENDANT- OR SURFACE-MOUNTED WITHIN 1 FOOT (305 mm) EDGE-TO-EDGE OF EACH OTHER.

EXCEPTIONS:

1. WHERE ELECTRONIC HIGH-FREQUENCY BALLASTS ARE USED.
2. LUMINAIRES ON EMERGENCY CIRCUITS.
3. LUMINAIRES WITH NO AVAILABLE PAIR IN THE SAME AREA.

505.4 EXIT SIGNS. (MANDATORY).
INTERNALLY ILLUMINATED EXIT SIGNS SHALL NOT EXCEED 5 WATTS PER SIDE.

505.5 INTERIOR LIGHTING POWER EQUIREMENTS (PRESCRIPTIVE).
A BUILDING COMPLIES WITH THIS SECTION IF ITS TOTAL CONNECTED LIGHTING POWER CALCULATED UNDER SECTION 505.5.1 IS NO GREATER THAN THE INTERIOR LIGHTING POWER CALCULATED UNDER SECTION 505.5.2.

505.5.1 TOTAL CONNECTED INTERIOR LIGHTING POWER.
THE TOTAL CONNECTED INTERIOR LIGHTING POWER (WATTS) SHALL BE THE SUM OF THE WATTS OF ALL INTERIOR LIGHTING EQUIPMENT AS DETERMINED IN ACCORDANCE WITH SECTIONS 505.5.1.1 THROUGH 505.5.1.4.

EXCEPTIONS:
1. THE CONNECTED POWER ASSOCIATED WITH THE FOLLOWING LIGHTING EQUIPMENT IS NOT INCLUDED IN CALCULATING
TOTAL CONNECTED LIGHTING POWER.
1.1. PROFESSIONAL SPORTS ARENA PLAYING FIELD LIGHTING.
1.2. SLEEPING UNIT LIGHTING IN HOTELS, MOTELS, BOARDING HOUSES OR SIMILAR BUILDINGS.
1.3. EMERGENCY LIGHTING AUTOMATICALLY OFF DURING NORMAL BUILDING OPERATION.
1.4. LIGHTING IN SPACES SPECIFICALYLY DESIGNED FOR USE BY OCCUPANTS WITH SPECIAL LIGHTING NEEDS INCLUDING THE VISUALLY IMPARED AND OTHER MEDICAL AND AGE-RELATED ISSUES.
1.5. LIGHTING IN INTERIOR SPACES THAT HAVE BEEN SPECIFICALLY DESIGNATED AS A REGISTERED INTERIOR HISTORIC LANDMARK.
1.6. CASINO GAMING AREAS.
2. LIGHTING EQUIPMENT USED FOR THE FOLLOWING SHALL BE EXCEMPT PROVIDED THAT IT IS IN ADDITION TO GENERAL LIGHTING AND IS CONTROLLED BY AN INDEPENDENT CONTROL DEVICE:
2.1. TASK LIGHTING FOR MEDICAL AND DENTAL PURPOSES.
2.2. DISPLAY LIGHTING FOR EXHIBITS IN GALLERIES, MUSUEMS AND MONUMENTS.
3. LIGHTING FOR THEATRICAL PURPOSES, INCLUDING PERFORMANCE, STAGE, FILM PRODUCTION AND VIDEO PRODUCTION.
4. LIGTHING FOR PHOTOGRAPHIC PROCESSES.
5. LIGHTING INTEGRAL TO EQUIPMENT OR INDTRUMENTATION AND IS INSTALLED BY THE MANUFACTURER.
6. TASK LIGHTING FOR PLANT GROWTH OR MAINTENANCE.
7. ADVERTISING SIGNAGE OR DIRECTIONAL SIGNAGE.
8. IN RESTUARANT BUILDINGS AND AREAS, LIGHTING FOR FOOD WARMING OR INTEGRAL TO FOOD PREPARATION EQUIPMENT.
9. LIGHTING EQIPMENT THAT IS FOR SALE.
10. LIGHTING DEMONSTRATION EQUIPMENT IN EDUCATION FACILITIES.
11. LIGHTING APPROVED BECAUSE OF SAFETY OR EMERGENCY CONSIDERATIONS, INCLUSIVE OF EXIT LIGHTS.
12. LIGHTING INTEGRAL TO BOTH OPEN AND GLASS-ENCLOSED REFRIGERATOR AND FREEZER CASES.
13. LIGHTING IN RETAIL DISPLAY WINDOWS, PROVIDED THE DISPLAY AREA IS ENCLOSED BY CEILING-HEIGHT PARTITIONS.
14. FURNITURE MOUNTED SUPPLEMENTAL TASK LIGHTING THAT IS CONTROLLED BY AUTOMATIC SHUTOFF.

505.5.1.1 SCREW LAMP HOLDERS.
THE WATTAGE SHALL BE THE MAXIMUM LABELED WATTAGE OF THE LUMINAIRE.

505.5.1.2 LOW-VOLTAGE LIGHTING.
THE WATTAGE SHALL BE THE SPECIFIED WATTAGE OF THE TRANSFORMER SUPPLYING THE SYSTEM.

505.5.1.3 OTHER LUMINAIRES.
THE WATTAGE OF ALL OTHER LIGHTING EQUIPMENT SHALL BE THE WATTAGE OF THE LIGHTING EQUIPMENT VERIFIED THROUGH DATA FURNISHED BY THE MANUFACTURER OR OTHER APPROVED SOURCES.

505.5.1.4 LINE-VOLTAGE LIGHTING TRACK AND PLUG-IN BUSWAY. THE WATTAGE SHALL BE:

1. THE SPECIFIED WATTAGE OF THE LUMINARES INCLUDED IN THE SYSTEM WITH A MINIMUM OF 30 W/LIN FT.(98 W/LIN.M);
2. THE WATTEGE LIMIT OF THE SYSTEM'S CIRCUIT BREAKER;
OR
3. THE WATTAGE LIMIT OF OTHER PERMANENT CURRENT LIMITING DEVICE(S) ON THE SYSTEM.

505.5.2 INTERIOR LIGHTING POWER.
THE TOTAL INTERIOR LIGHTING POWER (WATTS) IS THE SUM OF ALL INTERIOR LIGHTING POWERS FOR ALL AREAS IN THE BUILDING COVERED IN THIS PERMIT. THE INTERIOR LIGHTING POWER IS THE FLOOR AREA FOR EACH BUILDING AREA TYPE LISTED IN TABLE 505.5.2 TIMES THE VALUE FROM TABLE 505.5.2 FOR THAT AREA. FOR THE PURPOSES OF THIS METHOD, AN "AREA" SHALL BE DEFINED AS ALL CONTIGUOUS SPACES THAT ACCOMMODATE OR ARE ASSOCIATED WITH A SINGLE BUILDING AREA TYPE AS LISTED IN TABLE 505.5.2. WHEN THIS METHOD IS USED TO CALCULATE THE TOTAL INTERIOR LIGHTING POWER FOR AN ENTIRE BUILDING, EACH BUILDING AREA TYPE SHALL BE TREATED AS A SEPARATE AREA.

TABLE 505.5.2 INTERIOR LIGHTING POWER ALLOWNACES
USE AS APPLICABLE

505.6 EXTERIOR LIGHTING. (MANDATORY).
WHEN THE POWER FOR EXTERIOR LIGHTING IS SUPPLIED THROUGH THE ENERGY SERVICE TO THE BUILDING, ALL EXTERIOR LIGHTING, OTHER THAN LOW-VOLTAGE LANDSCAPE LIGHTING, SHALL COMPLY WITH SECTIONS 505.6.1 AND 505.6.2.

EXCEPTION:
WHERE APPROVED BECAUSE OF HISTORICAL, SAFETY,SIGNAGE OR EMERGENCY CONSIDERATIONS.

505.6.1 EXTERIOR BUILDING GROUNDS LIGHTING.
ALL EXTERIOR BUILDING GROUNDS LUMINAIRES THAT OPERATE AT GREATER THAN 100 WATTS SHALL CONTAIN LAMPS HAVING A MINIMUM EFFICACY OF 60 LUMENS PER WATT UNLESS THE LUMINAIRE IS CONTROLLED BY A MOTION SENSOR OR QUALIFIES FOR ONE OF THE EXCEPTIONS UNDER SECTION 505.6.2.

505.6.2 EXTERIOR BUILDING LIGHTING POWER. THE TOTAL EXTERIOR LIGHTING POWER ALLOWANCE FOR ALL EXTERIOR BUILDING APPLICATIONS IS THE SUM OF THE BASE SITE ALLOWANCE PLUS THE INDIVIDUAL ALLOWANCES FOR AREAS THAT ARE TO BE ILLUMINATED AND ARE PERMITTED IN TABLE 505.6.2(1) FOR THE APPLICABLE LIGHTING ZONE. TRADEOFFS ARE ALLOWED ONLY AMONG EXTERIOR LIGHTING APPLICATIONS LISTED IN TABLE 505.6.2(2), TRABLE SURFACE SECTION. THE LIGHTING ZONE FOR THE BUILDING EXTERIOR IS DETERMINED FROM TABLE 505.6.2(1) UNLESS OTHERWISE SPECIFIED BY THE LOCAL JURISDICTION. EXTERIOR LIGHTING FOR ALL APPLICATIONS (EXCEPT THOSE INCLUDED IN THE EXCEPTIONS TO SECTION 505.6.2) SHALL COMPLY WITH THE REQUIREMENTS OF SECTION 505.6.1.

EXCEPTIONS: LIGHTING USED FOR THE FOLLOWING EXTERIOR APPLICATIONS IS EXEMPT WHEN EQUIPED WITH A CONTROL DEVICE INDEPENDENT OF THE CONTROL OF THE NONEXEMPT LIGHTING.

1. SPECIALIZED SIGNAL, DIRECTIONAL AND MARKER LIGHTING ASSOCIATED WITH TRANSPORTATION;
2. ADVERTISING SIGNAGE OR DIRECTIONAL SIGNAGE;
3. INTEGRAL TO EQUIPMEMT OR INSTRUMENTATION AND IS INSTALLED BY ITS MANUFACTURER;
4. THEATRICAL PURPOSES, INCLUDING PERFORMANCE, STAGE, FILM PRODUCTION AND VIDEO PRODUCTION;
5. ATHLETIC PLAYING AREAS;
6. TEMPORARY LIGHTING;
7. INDUSTRIAL PRODUCTION; MATERIAL HANDLING; TRANSPORTATION SITES AND ASSOCIATED STORAGE AREAS;
8. THEME ELEMENTS IN THEME/ AMUSEMENT PARKS; AND
9. USED TO LIGHT FEATURES OF PUBLIC MONUMENTS AND REGISTERED HISTORIC LANDMARK STRUCTURES OR BUILDINGS.

505.7 ELECTRICAL ENERGY CONSUMPTION. (MANDATORY).
IN BUILDINGS HAVING INDIVIDUAL DWELLING UNITS, PROVISIONS SHALL BE MADE TO DETERMINE THE ELECTRICAL ENERGY CONSUMED BY EACH TENANT BY SEPARATELY METERING INDIVIDUAL DWELLING UNITS.

MANDATORY PLUMBING REQUIREMENTS: IECC 2009

SECTION 504
SERVICE WATER HEATING (MANDATORY)

504.1 GENERAL.
THIS SECTION COVERS THE MINIMUMEFFICIENCY OF,AND CONTROLS FOR, SERVICE WATER-HEATING EQUIPMENT AND INSULATION OF SERVICE HOT WATER PIPING.

504.2 SERVICE WATER-HEATING EQUIPMENT PERFORMANCE EFFICIENCY.
WATER-HEATING EQUIPMENT AND HOT WATER STORAGE TANKS SHALL MEET THE REQUIREMENTS OF TABLE 504.2. THE EFFICIENCY SHALL BE VERIFIED THROUGH DATA FURNISHED BY THE MANUFACTURER OR THROUGH CERTIFICATION UNDER AN APPROVED CERTIFICATION PROGRAM.

504.3 TEMPERATURE CONTROLS.
SERVICE WATER-HEATING EQUIPMENT SHALL BE PROVIDED WITH CONTROLS TO ALLOW A SETPOINT OF 110°F (43°C) FOR EQUIPMENT SERVING DWELLING UNITS AND 90°F (32°C) FOR EQUIPMENT SERVING OTHER OCCUPANCIES. THE OUTLET TEMPERATURE OF LAVATORIES IN PUBLIC FACILITY REST ROOMS SHALL BE LIMITED TO 110°F (43°C).

504.4 HEAT TRAPS.
WATER-HEATING EQUIPMENT NOT SUPPLIED WITH INTEGRAL HEAT TRAPS AND SERVING NONCIRCULATING SYSTEMS SHALL BE PROVIDED WITH HEAT TRAPS ON THE SUPPLY AND DISCHARGE PIPING ASSOCIATED WITH THE EQUIPMENT.

504.5 PIPE INSULATION.
FOR AUTOMATIC-CIRCULATING HOT WATER SYSTEMS, PIPING SHALL BE INSULATED WITH 1 INCH (25 mm) OF INSULATION HAVING A CONDUCTIVITY NOT EXCEEDING 0.27 BTU PER INCH/H × FT² × °F (1.53 W PER 25 mm/m² × K). THE FIRST 8 FEET (2438mm) OF PIPING IN NONCIRCULATING SYSTEMS SERVED BY EQUIPMENT WITHOUT INTEGRAL HEAT TRAPS SHALL BE INSULATED WITH 0.5 INCH (12.7mm) OF MATERIAL HAVING A CONDUCTIVITY NOT EXCEEDING 0.27 BTU PER INCH/H × FT² × °F (1.53 W PER 25 mm/m² × K).

504.6 HOT WATER SYSTEM CONTROLS.
AUTOMATIC-CIRCULATING HOT WATER SYSTEM PUMPS OR HEAT TRACE SHALL BE ARRANGED TO BE CONVENIENTLY TURNED OFF AUTOMATICALLY OR MANUALLY WHEN THE HOT WATER SYSTEM IS NOT IN OPERATION.

504.7 POOLS.
POOLS SHALL BE PROVIDED WITH ENERGY CONSERVING MEASURES IN ACCORDANCE WITH SECTIONS 504.7.1 THROUGH 504.7.3.

504.7.1 POOL HEATERS.
ALL POOL HEATERS SHALL BE EQUIPPED WITH A READILY ACCESSIBLE ON-OFF SWITCH TO ALLOW SHUTTING OFF THE HEATER WITHOUT ADJUSTING THE THERMOSTAT SETTING. POOL HEATERS FIRED BY NATURAL GAS SHALL NOT HAVE CONTINUOUSLY BURNING PILOT LIGHTS.

504.7.2 TIME SWITCHES.
TIME SWITCHES THAT CAN AUTOMATICALLY TURN OFF AND ON HEATERS AND PUMPS ACCORDING TO A PRESET SCHEDULE SHALL BE INSTALLED ON SWIMMING POOL HEATERS AND PUMPS.

EXCEPTIONS:
1. WHERE PUBLIC HEALTH STANDARDS REQUIRE 24-HOUR PUMP OPERATION.
2. WHERE PUMPS ARE REQUIRED TO OPERATE SOLAR-AND WASTE-HEAT-RECOVERY POOL HEATING SYSTEMS.

504.7.3 POOL COVERS.
HEATED POOLS SHALL BE EQUIPPED WITH A VAPOR RETARDANT POOL COVER ON OR AT THE WATER SURFACE. POOLS HEATED TO MORE THAN 900F (32OC) SHALL HAVE A POOL COVER WITH A MINIMUM INSULATION VALUE OF R-12.

EXCEPTION: POOLS DERIVING OVER 60 PERCENT OF THE ENERGY FOR HEATING FROM SITE-RECOVERED ENERGY OR SOLAR ENERGY SOURCE.

HGE CONSULTING, INC.
MEP ENGINEERS
F-7762
15603 GLEN CHASE
HOUSTON, TEXAS 77095
PHONE: 281-856-7682
FAX: 281-856-2438
Email:
MEP@HGECONSULTING.COM

IF ANY OR ALL OF THIS DOCUMENT IS REPRODUCED, MODIFIED OR WRONGLY DISTRIBUTED YOU WILL BE IN VIOLATION OF CONTRACT AND INFRINGEMENT OF COPYRIGHT LAWS. IF YOU FEEL THAT THIS DOCUMENT HAS REACHED YOU IN ERROR PLEASE CONTACT THE ABOVE OWNER AND DESTROY THE DOCUMENT. IF YOU CHOSE NOT TO DO SO, YOU WILL BE SUBJECT TO PROSECUTION UNDER THE CURRENT COPYRIGHT LAWS.

NUMBER	DATE	DESCRIPTION	BY:

KINGSLAND APTS.

HARRIS COUNTY, TEXAS

STATE OF TEXAS
JARZINHO VASQUEZ
88666
REGISTERED
PROFESSIONAL ENGINEER
08/18/15

- ○ PROGRESS SET
- ○ PERMIT ISSUE
- ● CONSTRUCTION ISSUE

DATE:	08/17/2015
DRAWN BY:	JA
CHK'D BY:	JV
JOB :	919-15

MEP-0.4

ENERGY COMPLIANCE (COMMERCIAL) CONTINUED

ENVELOPE COMPONENT CERTIFICATION

BUILDING COMPONENT CERTIFICATION

- INSULATION R-VALUES AND GLAZING AND DOOR U-FACTORS MUST BE CLEARLY MARKED ON BUILDING PLANS AND SPECIFICATIONS.
- CERTIFICATION OF INSTALLED COMPONENTS IS REQUIRED AND CAN BE ACCOMPLISHED THROUGH ANY OF THE FOLLOWING METHODS:
  - PRODUCT LABELS - FOR EXAMPLE, R-VALUES OF INSULATION PRINTED DIRECTLY ON THE INSULATION, STRIPING CODES, MANUFACTURERS' LABELS ON WINDOWS
  - CONTRACTOR STATEMENTS CERTIFYING THE PRODUCTS THEY HAVE INSTALLED
  - CHECK WITH YOUR LOCAL BUILDING OFFICIAL FOR REQUIREMENTS ON CERTIFYING BUILDING COMPONENTS IN YOUR JURISDICTION.

CERTIFYING INSTALLED INSULATION

- FOR BLOWN OR SPRAYED INSULATION, THE INITIAL INSTALLED THICKNESS, SETTLED THICKNESS, COVERAGE AREA, AND NUMBER OF BAGS USED MUST BE CLEARLY POSTED AT THE JOB SITE.
- FOR COMPONENTS HAVING A MANUFACTURER'S GUARANTEED R-VALUE RATING, THICKNESS MARKERS MUST BE PLACED AT LEAST EVERY 300 FEET.
- FOR COMPONENTS WITHOUT A MANUFACTURE'S GUARANTEED R-VALUE RATING, CONTACT THE INSULATION CONTRACTORS ASSOCIATION OF AMERICA FOR AN APPROVED WAY TO ENSURE PROPER INSULATION LEVELS ARE OBTAINED.
- ALL INSULATION REQUIREMENTS ASSUME THE INSULATION IS INSTALLED AT ITS STANDARD THICKNESS. IF INSULATION IS COMPRESSED, THE R-VALUE IS REDUCED AND THE BUILDING MAY NOT MEET THE REQUIREMENTS.

FIBERGLASS BATT INSULATION R-VALUES AND STANDARD THICKNESSES

INSULATION R-VALUE	STANDARD THICKNESS
R-11	3-1/2"
R-13	3-5/8"
R-15	3-1/2"
R-19	6-1/4"
R-21	5-1/2"
R-22	6-1/4"
R-30	9-1/2"
R-38	12"

MANDATORY ENVELOPE REQUIREMENTS: IECC 2009

502.4 AIR LEAKAGE. (MANDATORY).

502.4.1 WINDOW AND DOOR ASSEMBLIES.
THE AIR LEAKAGE OF WINDOW AND SLIDING OR SWINGING DOOR ASSEMBLIES THAT ARE PART OF THE BUILDING ENVELOPE SHALL BE DETERMINED IN ACCORDANCE WITH AAMA/WDMA/CSA 101/I.S.2/A440, OR NFRC 400 BY AN ACCREDITED, INDEPENDENT LABORATORY, AND LABELED AND CERTIFIED BY THE MANUFACTURER AND SHALL NOT EXCEED THE VALUES IN SECTION 402.4.2.

EXCEPTION: SITE-CONSTRUCTED WINDOWS AND DOORS THAT ARE WEATHERSTRIPPED OR SEALED IN ACCORDANCE WITH SECTION 502.4.3.

502.4.2 CURTAIN WALL, STOREFRONT GLAZING AND COMMERCIAL ENTRANCE DOORS.
CURTAIN WALL, STOREFRONT GLAZING AND COMMERCIAL-GLAZED SWINGING ENTRANCE DOORS AND REVOLVING DOORS SHALL BE TESTED FOR AIR LEAKAGE AT 1.57 POUNDS PER SQUARE FOOT (PSF) (75 PA) IN ACCORDANCE WITH ASTM E 283. FOR CURTAIN WALLS AND STOREFRONT GLAZING, THE MAXIMUM AIR LEAKAGE RATE SHALL BE 0.3 CUBIC FOOT PER MINUTE PER SQUARE FOOT (CFM/FT^2) ($5.5\ M^3/H \times M^2$) OF FENESTRATION AREA. FOR COMMERCIAL GLAZED SWINGING ENTRANCE DOORS AND REVOLVING DOORS, THE MAXIMUM AIR LEAKAGE RATE SHALL BE 1.00 CFM/FT^2 ($18.3\ M^3/H \times M^2$) OF DOOR AREA WHEN TESTED IN ACCORDANCE WITH ASTM E 283.

502.4.3 SEALING OF THE BUILDING ENVELOPE.
OPENINGS AND PENETRATIONS IN THE BUILDING ENVELOPE SHALL BE SEALED WITH CAULKING MATERIALS OR CLOSED WITH GASKETING SYSTEMS COMPATIBLE WITH THE CONSTRUCTION MATERIALS AND LOCATION. JOINTS AND SEAMS SHALL BE SEALED IN THE SAME MANNER OR TAPED OR COVERED WITH A MOISTURE VAPOR-PERMEABLE WRAPPING MATERIAL. SEALING MATERIALS SPANNING JOINTS BETWEEN CONSTRUCTION MATERIALS SHALL ALLOW FOR EXPANSION AND CONTRACTION OF THE CONSTRUCTION MATERIALS.

502.4.4 HOT GAS BYPASS LIMITATION.
COOLING SHALL NOT USE HOT GAS BYPASS OR OTHER EVAPORATOR PRESSURE CONTROL SYSTEMS UNLESS THE SYSTEM IS DEISGNED WITH MULTIPLE STEPS OF UNLOADING OR CONTINUOUS CAPACITY MODULATION. THE CAPACITY OF THE HOT GAS BYPASS SHALL BE LIMITED AS INDICATED IN TABLE 502.4.4.

EXCEPTION: UNITARY PACKAGED SYSTEMS WITH COOLING CAPACITIES NOT GREATER THAN 90,000 BTU/H (26 379 W).

TABLE 502.4.4
MAXIMUM HOT GAS BYPASS CAPACITY

RATED CAPACITY	MAXIMUM HOT GAS BYPASS CAPACITY (% OF TOTAL CAPACITY)
< 240,000 BTU/H	50%
> 240,000 BTU/H	25%

502.4.5 OUTDOOR AIR INTAKES AND EXHAUST OPENINGS.
STAIR AND ELEVATOR SHAFT VENTS AND OTHER OUTDOOR AIR INTAKES AND EXHAUST OPENINGS INTEGRAL TO THE BUILDING ENVELOPE SHALL BE EQUIPPED WITH NOT LESS THAN A CLASS I MOTORIZED, LEAKAGE-RATED DAMPER WITH A MAXIMUM LEAKAGE RATE OF 4 CFM PER SQUARE FOOT ($6.8\ L/S \cdot C\ M^2$) AT 1.0 INCH WATER GAUGE (W.G.) (1250 PA) WHEN TESTED IN ACCORDANCE WITH AMCA 500D.

EXCEPTION: GRAVITY (NONMOTORIZED) DAMPERS ARE PERMITTED TO BE USED IN BUILDINGS LESS THAN THREE STORIES IN HEIGHT ABOVE GRADE.

502.4.6 LOADING DOCK WEATHERSEALS.
CARGO DOORS AND LOADING DOCK DOORS SHALL BE EQUIPPED WITH WEATHERSEALS TO RESTRICT INFILTRATION WHEN VEHICLES ARE PARKED IN THE DOORWAY.

502.4.7 VESTIBULES.
A DOOR THAT SEPARATES CONDITIONED SPACE FROM THE EXTERIOR SHALL BE PROTECTED WITH AN ENCLOSED VESTIBULE, WITH ALL DOORS OPENING INTO AND OUT OF THE VESTIBULE EQUIPPED WITH SELF-CLOSING DEVICES. VESTIBULES SHALL BE DESIGNED SO THAT IN PASSING THROUGH THE VESTIBULE IT IS NOT NECESSARY FOR THE INTERIOR AND EXTERIOR DOORS TO OPEN AT THE SAME TIME.

EXCEPTIONS:
1. BUILDINGS IN CLIMATE ZONES 1 AND 2 AS INDICATED IN FIGURE 301.1 AND TABLE 301.1.
2. DOORS NOT INTENDED TO BE USED AS A BUILDING ENTRANCE DOOR, SUCH AS DOORS TO MECHANICAL OR ELECTRICAL EQUIPMENT ROOMS.
3. DOORS OPENING DIRECTLY FROM A SLEEPING UNIT OR DWELLING UNIT.
4. DOORS THAT OPEN DIRECTLY FROM A SPACE LESS THAN 3,000 SQUARE FEET (298 M^2) IN AREA.
5. REVOLVING DOORS.
6. DOORS USED PRIMARILY TO FACILITATE VEHICULAR MOVEMENT OR MATERIAL HANDLING AND ADJACENT PERSONNEL DOORS.

502.4.8 RECESSED LUMINAIRES.
RECESSED LUMINAIRES INSTALLED IN THE BUILDING THERMAL ENVELOPE SHALL BE SEALED TO LIMT AIR LEAKAGE BETWEEN CONDITIONED AND UNCONDITIONED SPACES. ALL RECESSED LUMINARES SHALL BE IC-RATED AND LABELED AS MEETING ASTM E 283 WHEN TESTED AT 1.57 PSF (75 PA) PRESSURE DIFFERENTIAL WITH NO MORE THAN 2.0 CFM (0.944 L/S) OF AIR MOVEMENT FROM THE CONDITIONED SPACE TO THE CEILING CAVITY. ALL RECESSED LUMINARES SHALL BE SEALED WITH A GASKET OR CAULK BETWEEN THE HOUSING AND INTERIOR WALL OR CEILING COVERING.

HGE CONSULTING, INC.
MEP ENGINEERS
F-7762
15603 GLEN CHASE
HOUSTON, TEXAS 77095
PHONE: 281-856-7682
FAX: 281-856-2438
Email:
MEP@HGECONSULTING.COM

IF ANY OR ALL OF THIS DOCUMENT IS REPRODUCED, MODIFIED OR WRONGLY DISTRIBUTED YOU WILL BE IN VIOLATION OF CONTRACT AND INDEMNIFICATION OWED TO US. IF YOU FEEL THAT THIS DOCUMENT HAS REACHED YOU IN ERROR PLEASE CONTACT THE ABOVE OWNER AND DESTROY THE DOCUMENT. IF YOU CHOSE NOT TO DO SO, YOU WILL BE SUBJECT TO PROSECUTION UNDER THE CURRENT COPYRIGHT LAWS.

NUMBER	DATE	DESCRIPTION	BY:

KINGSLAND APTS.

HARRIS COUNTY, TEXAS

- ○ PROGRESS SET
- ○ PERMIT ISSUE
- ● CONSTRUCTION ISSUE

DATE:	08/17/2015
DRAWN BY:	JA
CHK'D BY:	JV
JOB :	919-15

MEP-0.5

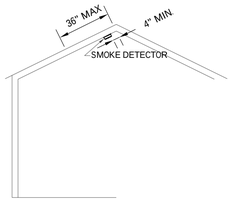

SMOKE DETECTOR VAULTED OR PEAKED CEILING

N.T.S.

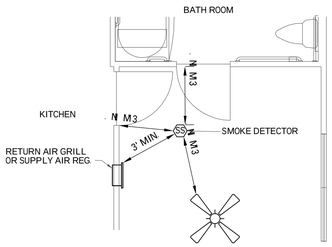

SMOKE DETECTOR CLEARANCES

N.T.S.

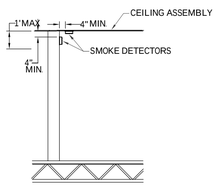

SMOKE DETECTORS WALL & CEILING MOUNTED LOCATIONS

N.T.S.

Ⓐ FIBERGLASS DUCTBOARD PLENUM

Ⓑ STEEL FRAME GRILL/DIFFUSER 26 Ga (055)MINIMUM. SEE NOTE 5

Ⓒ 3/4" x 3/4" x 16 Ga. (19 x 19 x 1.61) SUPPORTED ANGLE (2 SIDES). SEE NOTES 1 & 2

Ⓓ FLEX DUCT UL CLASSIFIED AIR DUCT (CLASS 0 OR 1)

Ⓔ WOOD TRUSS (REFER TO SPECIFIC UL DESIGN NO)

Ⓕ 5/8" (16) GYPSUM WALLBOARD (REFER TO SPECIFIC UL DESIN NO)

Ⓖ RC CHANNEL

Ⓗ SUB-FRAME WITH PLASTER FLANGE

Ⓘ 1" x 1" x 22Ga. (25 x 25 x .85) RETAINING ANGLE (MIN.) ON ALL 4 SIDES

Ⓙ AIR DUCT

Ⓚ CEILING DAMPER

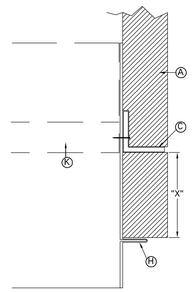

DETAIL A

NTS

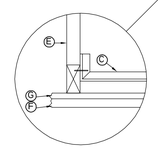

DETAIL B

NTS

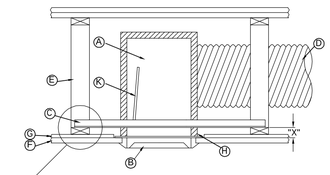

END VIEW WITH GRILLE

NTS

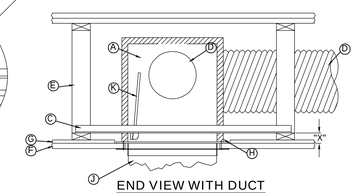

END VIEW WITH DUCT

NTS

CONSTRUCTION:

1. UL LISTED FUSIBLE LINK 212°F (100°C) STANDARD.
2. BLADES: 22 GA. (0.85) G60 ROLL-FORMED GALVANIZED STEEL.
3. BLADE INSULATION: NON-ASBESTOS UL CLASSIFIED.
4. DAMPER FRAME: 22 GA. (.085) G60 GALV. STEEL.
5. FIBERGLASS PLENUM (BY MAP OR OTHERS). 1" (25) THICK FIBERGLASS DUCT BOARD WITH FIRE RESISTANT FOIL-SCRIM-KRAFT FACING. UL 181 CLASS I CLASSIFIED. ASSEMBLED WITH UL LISTED TAPE.
6. CUTTING AND INSTALATION OF COLLARS FOR UL CLASSIFIED CLASS 0 OR I FLEXIBLE AIR DUCT CONNECTION BY OTHERS. MAXIMUM OF THREE.
7. DAMPER SUB-FRAME WITH 5/8" (16) MIN. PLASTER FLANGE. MIN. 26 GA. (.055) GALVANIZED STEEL.
8. MODEL 0714 STEEL GRILLE/DIFFUSER (BY MAP OR OTHERS). BOTTOM OF DAMPER SUB-FRAME IS FLUSH WITH CEILING. STANDARD DEPTH FOR GRILLE CLEARANCE IS 2-1/2" (64).

QUALIFICATIONS

UL 263 CLASSIFIED CEILING RADIATION DAMPER. CATEGORY CABS. (FILE # 9660)

1 HOUR RATED FOR USE IN UL FLOOR/CEILING DESIGN NUMBERS L550/L562/L574/L579 AND ROOF/CEILING DESIGN NUMBERS P531/P538/545. (SIMILAR IN CONSTRUCTION TO DESIGNS L521/L546 AND P522 RESPECTIVELY).

MANUFACTURED AIR PRODUCTS.
DIVISION OF NAILOR INDUSTRIES, INC.

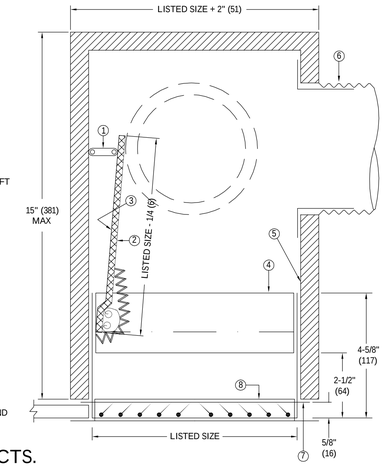

CEILING RADIATION DAMPER

FOR WOOD TRUSS CEILING ASSEMBLIES

FIBERGLASS PLENUM, SIDE INLET

MODEL: CRD0757

MANUFACTURED AIR PRODUCTS.
DIVISION OF NAILOR INDUSTRIES, INC.

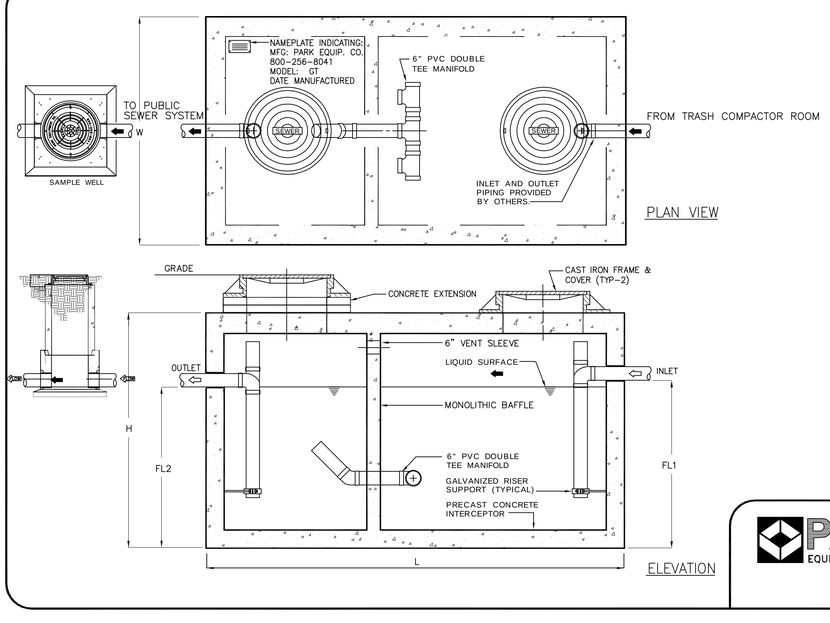

GREASE INTERCEPTOR SCHEDULE								
MODEL NO.	CAPACITY USGal	GREASE CAP. (LBS)	EMPTY WT (LBS)	LENGTH L	WIDTH W	HEIGHT H	INLET FL1	OUTLET FL2
GT-750	750	1,700	11,000	7'-10"	4'-4"	6'-0"	4'-5"	4'-2"

OTHER SIZES ARE AVAILABLE. CONTACT US FOR MORE INFORMATION

GREASE INTERCEPTOR SCHEDULE				
FIXTURE	QUANTITY	FIXTURE UNITS	TOTAL	SIZE*
SINK	1	2	2	750 GAL

*SIZING BASED ON TABLE 10-3 2006 UPC

Engineering Data

The grease interceptor is structurally & hydraulically engineered to conform to regional plumbing codes recommended in most cities. Consult with local authorities for specific application requirements.

Shop drawings shall include complete structural & bouyancy calculations certified by a licensed professional engineer.

Consult with Park Equipment Company for exact excavation dimensions & shipping information.

TABLE 10-3 2006 UPC GRAVITY GREASE INTERCEPTOR	
DFUs	INTERCEPTOR VOLUME
8	500 GALLON
21	750 GALLON
35	1,000 GALLON
90	1,250 GALLON
172	1,500 GALLON
216	2,000 GALLON

MAXIMUM DFUs FOR 6" SANITARY SEWER LINE SLOPED AT 1/8"PER FOOT = 576 DFUs.
GREASE TRAP TO BE 500 GALLON GREASE TRAP.

PARK EQUIPMENT COMPANY
"Expect the Best"

TEL (713) 937-7602
FAX (713) 937-4254
WATS (800) 256-8041

GREASE TRAP SERIES GT
500 THRU 4000 GALLON CAPACITY

SUBCONTRACTOR SHALL VERIFY CONDENSOR CABINET SIZE AND MANUFACTURER CLEARANCES AND SUBMIT PAD SHOP DRAWINGS INDICATING SUCH FOR ENGINEERS APPROVAL

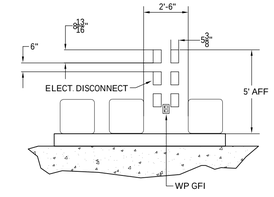

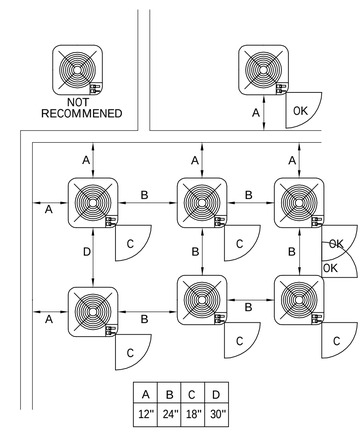

A	B	C	D
12"	24"	18"	30"

CONDENSER DETAIL

N.T.S.

HGE CONSULTING, INC.
MEP ENGINEERS
F-7762
15603 GLEN CHASE
HOUSTON, TEXAS 77095
PHONE: 281-856-7682
FAX: 281-856-2438
Email:
MEP@HGECONSULTING.COM

IF ANY OR ALL OF THIS DOCUMENT IS REPRODUCED, MODIFIED OR WRONGLY DISTRIBUTED, YOU WILL BE IN VIOLATION OF CONTRACT AND INFRINGEMENT OF COPYRIGHT LAWS. IF YOU FEEL THAT THIS DOCUMENT HAS REACHED YOU IN ERROR PLEASE CONTACT THE ABOVE OWNER AND DESTROY THE DOCUMENT. IF YOU CHOSE NOT TO DO SO, YOU WILL BE SUBJECT TO PROSECUTION UNDER THE CURRENT COPYRIGHT LAWS.

NUMBER	DATE	DESCRIPTION	BY:

KINGSLAND APTS.

HARRIS COUNTY, TEXAS

STATE OF TEXAS
JAIRZINHO VASQUEZ
88666
REGISTERED PROFESSIONAL ENGINEER
09/18/15

- ○ PROGRESS SET
- ○ PERMIT ISSUE
- ● CONSTRUCTION ISSUE

DATE:	08/17/2015
DRAWN BY:	JA
CHK'D BY:	JV
JOB :	919-15

MEP-0.6